# MC34011A

## Advance Information

### ELECTRONIC TELEPHONE CIRCUIT

- Provides All Basic Telephone Station Apparatus Functions in a Single IC, Including DTMF Dialer, Tone Ringer, Speech Network and Line Voltage Regulator
- DTMF Generator Uses Low-Cost Ceramic Resonator with Accurate Frequency Synthesis Technique
- Tone Ringer Drives Piezoelectric Transducer and Satisfies EIA RS-470 Impedance Signature Requirements
- Speech Network Provides Two–Four Wire Conversion with Adjustable Sidetone Utilizing an Electret Transmitter
- On-Chip Regulator Insures Stable Operation Over Wide Range of Loop Lengths
- $I^2L$ Technology Provides Low 1.4 Volt Operation and High Static Discharge Immunity
- Equalization Provided to Compensate for Long/Short Line Performance

**ELECTRONIC TELEPHONE CIRCUIT**

**BIPOLAR LINEAR/$I^2L$**

**FN SUFFIX**
**44-PIN**
**PLCC**
**CASE 777-02**

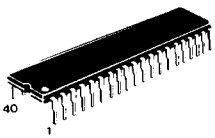


**P SUFFIX**
**PLASTIC PACKAGE**
**CASE 711-03**

**FIGURE 1 — ELEMENTS OF THE ELECTRONIC TELEPHONE**

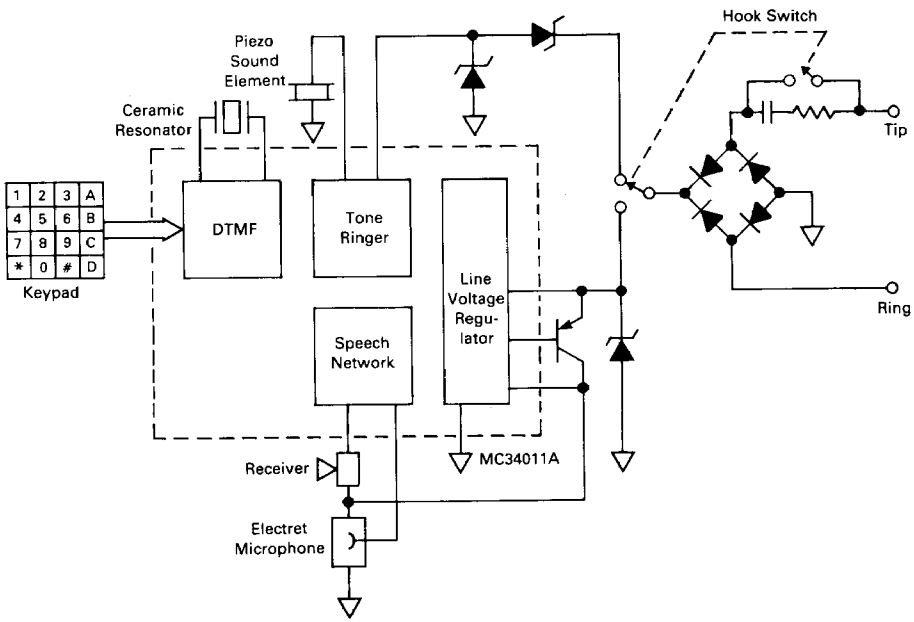


This document contains information on a new product. Specifications and information herein are subject to change without notice.

**MAXIMUM RATINGS (Voltage References to V−)**

| Parameter | Value | Unit |
|---|---|---|
| V+ Terminal Voltage (Pin 34) | +18, −1.0 | V |
| VR Terminal Voltage (Pin 29) | +2.0, −1.0 | V |
| RXO Terminal Voltage (Pin 27) | +2.0, −1.0 | V |
| TRS Terminal Voltage (Pin 37) | +35, −1.0 | V |
| TRO (With Tone Ringer Inactive) Terminal Voltage | +2.0, −1.0 | V |
| R1–R4 Terminal Current (Pins 1–4)<br>C1–C4 (Pins 5–8) | ±100 | mA |
| Operating Ambient Temperature Range | −20 to +60 | °C |
| Storage Temperature Range | −65 to +150 | °C |

**FIGURE 2 — PIN CONNECTIONS**

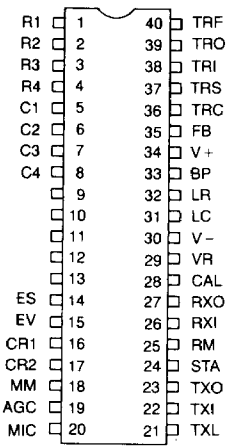


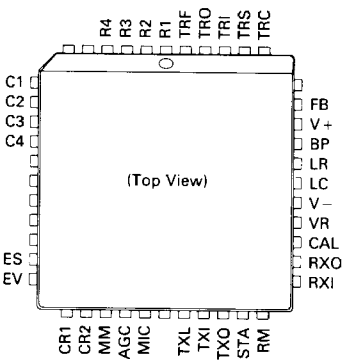


## GENERAL CIRCUIT DESCRIPTION

### Introduction

The MC34011A Electronic Telephone Circuit (ETC) provide all the necessary elements of a tone dialing telephone in a single IC. The functional blocks of the ETC include the DTMF dialer, speech network, tone ringer, and dc line interface circuit (Figure 1).

Low voltage operation is a necessity for telephones in networks where parallel telephone connections are common. An electronic speech network operating in parallel with a conventional telephone may receive line voltages below 2.5 volts. DTMF dialers operate at similarly low-line voltages when signaling through battery powered station carrier equipment. These low voltage requirements have been addressed by realizing the MC34011A in a bipolar/$I^2L$ technology with appropriate circuit techniques. The resulting speech and dialer circuits maintain specified performance with instantaneous input voltage as low as 1.4 volts.

**FIGURE 3 — DC LINE INTERFACE BLOCK DIAGRAM**

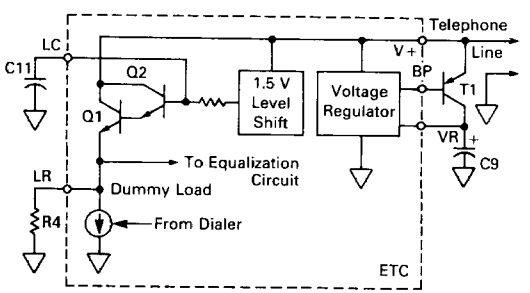


### Line Voltage Regulator

The dc line interface circuit (Figure 3) determines the dc input characteristic of the telephone. At low input voltages (less than 3 volts) the ETC draws only the speech and dialer bias currents through the VR regulator. As input voltage increases, Q1 conducts the excess dc line current through resistor R4. The 1.5 volt level shift prevents saturation of Q2 with telephone line signals up to 2.0 volts peak (+5.2 dBm). A constant current (dummy load) is switched off when the DTMF dialer is activated to reduce line current transients. Figure 4 illustrates the dc voltage/current characteristic of an MC34011A telephone.

## GENERAL CIRCUIT DESCRIPTION (continued)

FIGURE 4 — DC V-I CHARACTERISTIC OF THE ETC

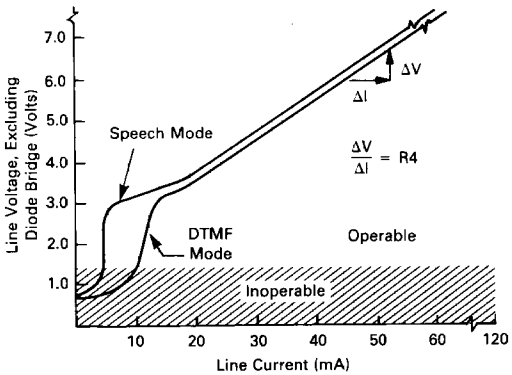


### Speech Network

The speech network (Figure 5) provides the two-to-four wire interface between the telephone line and the instrument's transmitter and receiver. An electret microphone biased from VR drives the transmit amplifier. For very loud talkers, the peak limiter circuit reduces the transmit input level to maintain low distortion. The transmit amplifier output signal is inverted at the STA terminal and driven through an external R-C network to control the receiver sidetone level. The switched ac resistance at the RM terminal reduces receiver signal when dialing and suppresses clicks due to hook or keypad switch transitions. When transmitting, audio signal currents ($i_{TXO}$ and $i_{RXO}$) flow through the voltage regulator pass transistor (T1) to drive the telephone line. This feature has two consequences: 1) In the transmitting mode the receiver sidetone current $i_{RXO}$ contributes to the total signal on the line along with $i_{TXO}$; 2) The ac impedance of the telephone is determined by the receiver impedance and the voltage gain from the line to the receiver amplifier output.

### Equalization Circuit

The equalization circuit varies the transmit, receive and sidetone gains with loop current to compensate for losses in long lines. The LR terminal voltage varies directly as the dc loop current. The equalization circuit senses this voltage and switches in external resistors between V+ and V− and across capacitor C6 (Figure 5) when the loop current exceeds a threshold level. The speech network operates with full transmit, receive and sidetone gains for long loops. On short loops the LR voltage exceeds the threshold and these gains are reduced. The threshold detection circuit has a dc hysteresis to prevent distortion of speech signals when the telephone is operated at the threshold current. The equalization is disabled (gains at full value) during dialing.

### DTMF Dialer

Keypad interface comparators activate the DTMF row and column tone generators (Figure 6) when a row and column input are connected through a SPST keypad. The keypad interface is designed to function with contact resistances up to 1.0 kΩ and leakage resistances as low as 150 kΩ. Single tones may be initiated by depressing two keys in the same row or column.

FIGURE 5 — SPEECH NETWORK BLOCK DIAGRAM

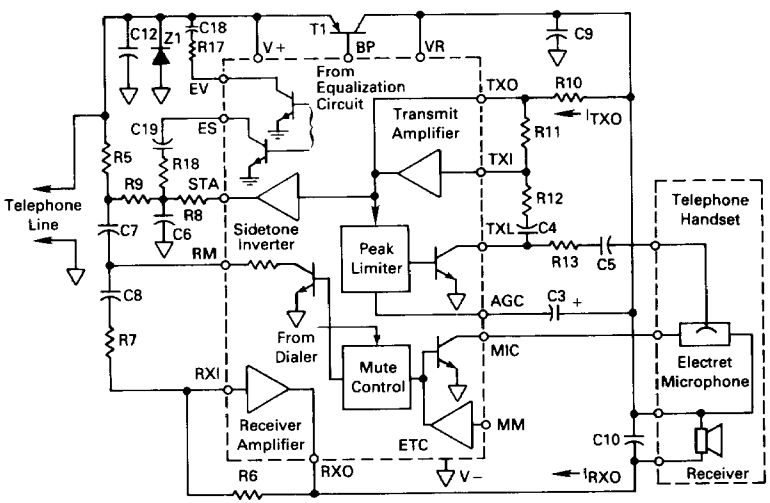

The programmable counters employ a novel design to produce non-integer frequency ratios. The various DTMF tones are synthesized with frequency division errors less than ±0.16% (Table 1). Consequently an inexpensive ceramic resonator can be used instead of a quartz crystal as the DTMF frequency reference. Total frequency error less than ±0.8% can be achieved with ±0.3% ceramic resonator. The row and column D/A converters produce 16-step approximations of sinusoidal waveforms. Feedback through terminal FB reduces the DTMF output impedance to approximately 2.0 kΩ to satisfy return loss specifications.

**FIGURE 6 — DTMF DIALER BLOCK DIAGRAM**

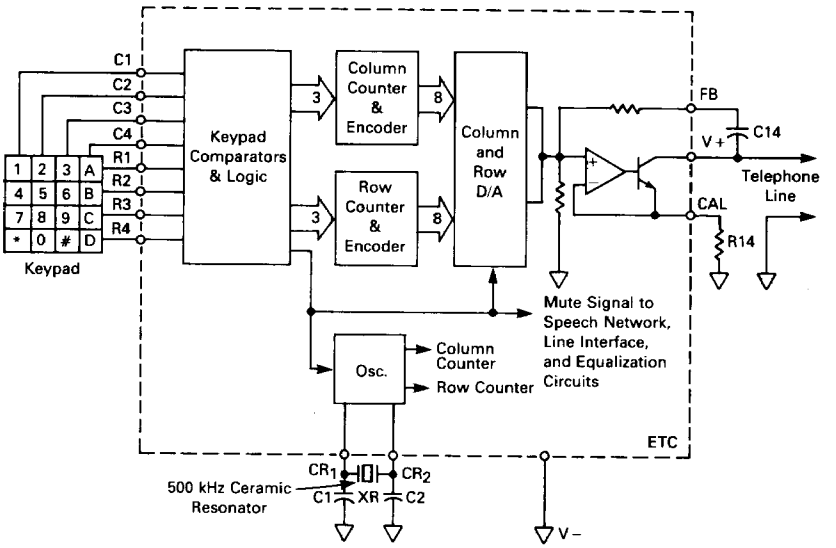


**FIGURE 7 — TONE RINGER BLOCK DIAGRAM**

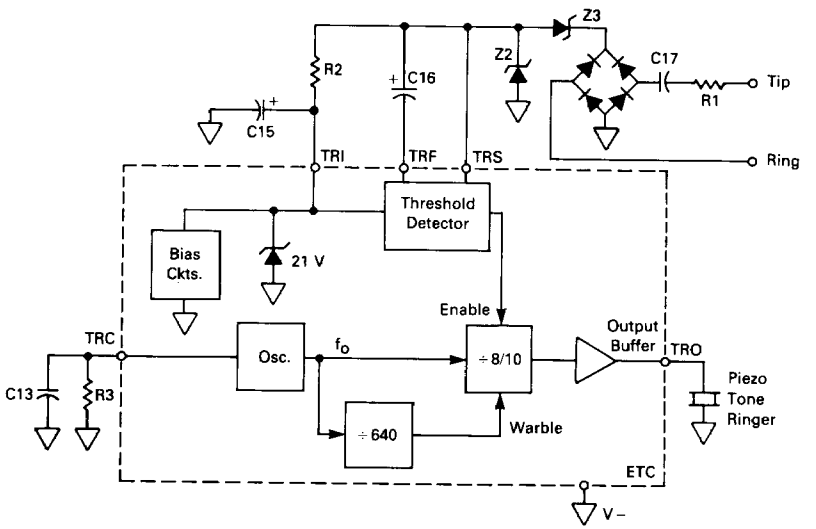

TABLE 1 — FREQUENCY SYNTHESIZER ERRORS

| | DTMF Standard (Hz) | Tone Output Frequency with 500 kHz Oscillator | % Deviation from Standard |
|---|---|---|---|
| Row 1 | 697 | 696.4 | −0.086 |
| Row 2 | 770 | 769.2 | −0.104 |
| Row 3 | 852 | 853.2 | +0.141 |
| Row 4 | 941 | 939.8 | −0.128 |
| Column 1 | 1209 | 1207.7 | −0.108 |
| Column 2 | 1336 | 1336.9 | +0.067 |
| Column 3 | 1477 | 1479.3 | +0.156 |
| Column 4 | 1633 | 1634.0 | +0.061 |

**Tone Ringer**

The tone ringer (Figure 7) generates a warbling square wave output drive to a piezo sound element when the ac line voltage exceeds a predetermined threshold level. The threshold detector uses a current mode comparator to prevent on/off chatter when the output current reduces the voltage available at the ringer input. When the average current into the tone ringer exceeds the threshold level, the ringer output TRO commences driving the piezo transducer. This output current sourced from TRI increases the average current measured by the threshold detector. As a result, hysteresis is produced beween the tone ringer on and off thresholds. The output frequency at TRO alternates between $f_O/8$ and $f_O/10$ at a warble rate of $f_O/640$, where $f_O$ is the ringer oscillator frequency.

2

## PIN DESCRIPTION

(See Figure 38 for external component identifications.)

| PIN (PLCC) | PIN (DIP) | Designation | Function |
|---|---|---|---|
| 1–4 | 1–4 | R1–R4 | Keypad inputs for Rows 1 through 4. When open, internal 8.0 kΩ resistors pull up the row inputs to a regulated (≈1.1 volt) supply. In normal operation, a row and a column input are connected through a SPST switch by the telephone keypad. Row inputs can also be activated by a Logic "0" (<500 mV) from a microprocessor port. |
| 7–10 | 5–8 | C1–C4 | Keypad inputs for Columns 1 through 4. When open, internal 8.0 kΩ resistors pull down the column inputs to V−. In normal operation, connecting any column input to any row input produces the respective row and column DTMF tones. In addition to being connected to a row input, column inputs can be activated by a Logic "1" (>600 mV and <3.0 volt). |
| 5, 6 11–15, 23,39 | 9–13 | NC | No connection |
| 16 | 14 | ES | Sidetone Equalization terminal connects an external resistor between the junction of R8, R9 and V−. At loop currents greater than the equalization threshold this resistor is switched in to reduce the sidetone level. The resistor is switched out during dialing. |
| 17 | 15 | EV | Voice Equalization terminal connects an external resistor between V+ and V−, for loop length equalization. At loop currents greater than the equalization threshold this resistor is switched in to reduce the transmit and receive gains. The resistor is switched out during dialing. |
| 18,19 | 16,17 | CR1, CR2 | Ceramic Resonator oscillator input and feedback terminals, respectively. The DTMF dialer is intended to operate with a 500 kHz ceramic resonator from which row and column tones are synthesized. |
| 20 | 18 | MM | Microphone Mute. The MM pin provides a means to mute the microphone and transmit amplifier in response to a digital control signal. When this pin is connected to a Logic "1" (>2.0 V) the microphone dc return path and the transmit amplifier output are disabled. |
| 21 | 19 | AGC | Automatic Gain Control low-pass filter terminal. Capacitor C3 connected between AGC and VR sets the attack and decay time of the transmit limiter circuit. This capacitor also aids in reducing clicks in the receiver due to hook-switch transients and DTMF on/off transients. In conjunction with internal resistors, C3 (1.0 μF) forms a timer which mutes the receiver amplifier for approximately 20 milliseconds after the user goes off-hook or releases a DTMF Key. |
| 22 | 20 | MIC | Microphone negative supply terminal. The dc current from the electret microphone is returned to V− through the MIC terminal which is connected to the collector of an on-chip NPN transistor. The base of this transistor is controlled either internally by the mute signal from the DTMF generator, or externally by the logic input pin MM. |
| 24 | 21 | TXL | Transmit Input Limiter. An internal variable resistance element at the TXL terminal controls the transmitter input level to prevent clipping with high signal levels. Coupling capacitors C4 and C5 prevent dc current flow through TXL. The dynamic range of the transmit peak limiter is controlled by resistors R12 and R13. |
| 25 | 22 | TXI | Transmit amplifier Input. TXI is the input to the transmit amplifier from an electret microphone. AC coupling capacitors allow the dc offset at TXI to be maintained approximately 0.6 V above V− by feedback through resistor R11 from TXO. |
| 26 | 23 | TXO | Transmit Amplifier Output. The transmit amplifier output drives ac current through the voltage regulator pass-transistor T1 via resistor R10. The dc bias voltage at TXO is typically 0.6 volts above V−. The transmit amplifier gain is controlled by the R11/(R12 + R13) ratio. |

(continued)

## PIN DESCRIPTION (continued)

| PIN (PLCC) | PIN (DIP) | Designation | Function |
|---|---|---|---|
| 27 | 24 | STA | SideTone Amplifier output. STA is the output of the sidetone inverter amplifier whose input is driven by the transmit signal at TXO. The inverted transmit signal from STA subtracts from the receiver amplifier input current from V+, thus reducing the receiver sidetone level. Since the transmitted signal at V+ is phase shifted with respect to TXO by the reactive impedance of the phone line, the signal from STA must be similarly phase-shifted in order to provide adequate sidetone reduction. This phase relationship between the transmit signal at TXO and the sidetone cancellation signal from STA is controlled by R8, R9, and C6. |
| 28 | 25 | RM | Receiver Amplifier Mute. A switched resistance at the RM terminal attenuates the receiver amplifier input signal produced by DTMF dialing tones at V+. RM also mutes clicks at the receiver which result from keypad or hook switch transitions. The ac resistance at RM is typically 540 Ω in the mute mode and 200 kΩ otherwise. Coupling capacitors C7 and C8 prevent dc current flow through RM. |
| 29 | 26 | RXI | Receiver Amplifier Input. RXI is the input terminal of the receiver amplifier which is driven by ac signals from V+ and STA. Input coupling capacitor C8 allows RXI to be biased approximately 0.6 volts above the V− via feedback resistor R6. |
| 30 | 27 | RXO | Receiver Amplifier Output. This terminal is connected to the open-collector NPN output transistor of the receiver amplifier. DC bias current for the output device is sourced through the receiver from VR. The bias voltage at RXO is typically 0.6 volts above the V−. Capacitor C10 from RXO to VR provides frequency compensation for the receiver amplifier. |
| 31 | 28 | CAL | Amplitude CALibration terminal for DTMF dialer. Resistor R14 from the CAL pin to V− controls the DTMF output signal level at Tip and Ring. |
| 32 | 29 | VR | Voltage Regulator output terminal. VR is the output of a 1.1 volt voltage regulator which supplies power to the speech network amplifiers and DTMF generator during signaling. To improve regulator efficiency at low line current conditions, an external PNP pass-transistor T1 is used in the regulator circuit. Capacitor C9 frequency compensates the VR regulator to prevent oscillation. |
| 33 | 30 | V− | The dc common (more negative input) connected to Tip and Ring through the polarity guard bridge. |
| 34 | 31 | LC | DC Load Capacitor. Capacitor C11 from LC to V− forms a low-pass filter which prevents the resistor at LR from loading ac speech and DTMF signals. |
| 35 | 32 | LR | DC Load Resistor. Resistor R4 from LR to V− determines the dc input resistance at Tip and Ring. This resistor is external not only to enable programming the dc resistance but also to avoid high on-chip power dissipation with short telephone lines. It acts as a shunt load conducting the excess dc line current. At low line voltages (<3.0 volts), no current flows through LR. |
| 36 | 33 | BP | Base of a PNP Pass-transistor. Under long-loop conditions where low line voltages would cause VR to fall below 1.1 volts, BP drives the PNP transistor T1 into saturation, thereby minimizing the voltage drop across the pass transistor. At line voltages which maintain VR above 1.1 volts, BP biases T1 in the linear region thereby regulating the VR voltage. Transistor T1 also couples the ac speech signals from the transmit amplifier to Tip and Ring at V+. |
| 37 | 34 | V+ | The more positive input to the regulator, speech, and DTMF sections connected to Tip and Ring through the polarity guard diode bridge. |
| 38 | 35 | FB | FeedBack terminal for DTMF output. Capacitor C14 connected from FB to V+ provides ac feedback to reduce the output impedance to Tip and Ring when tone dialing. |
| 40 | 36 | TRC | Tone Ringer oscillator Capacitor and resistor terminal. The relaxation oscillator frequency $f_O$ is set by resistor R3 and capacitor C13 connected from TRC to V−. Typically, $f_O = (R3C13 + 8.0\ \mu s)^{-1}$. |
| 41 | 37 | TRS | Tone Ringer Input Sense. TRS is the most positive input terminal of the tone ringer and the reference for the threshold detector. |
| 42 | 38 | TRI | Tone Ringer Input terminal. TRI is the positive supply voltage terminal for tone ringer circuitry. Current is supplied to TRI through resistor R2. When the average voltage across R2 exceeds an internal reference voltage (typically 1.6 volts) the tone ringer output is enabled. |
| 43 | 39 | TRO | Tone Ringer Output terminal. The frequency of the square wave output signal at TRO alternates from $f_O/8$ to $f_O/10$ at a warble rate of $f_O/640$. Typical output frequencies are 1000 Hz and 800 Hz with a 12.5 Hz warble rate. TRO sources or sinks up to 20 mA to produce an output voltage swing of 18 volts peak-to-peak across the piezo transducer. Tone ringer volume control can be implemented by a variable resistor in series with the piezo transducer. |
| 44 | 40 | TRF | Tone Ringer Input Filter capacitor terminal. Capacitor C16 connected from TRF to TRS forms a low-pass filter. This filter averages the signal across resistor R2 and presents this dc voltage to the input of the threshold detector. Line voltage transients are rejected if the duration is insufficient to charge C16 to 1.6 volts. |

## ELECTRICAL CHARACTERISTICS ($T_A$ = 25°C)

### KEYPAD INTERFACE CIRCUIT

| Characteristic | Test Method | Symbol | Min | Typ | Max | Unit |
|---|---|---|---|---|---|---|
| Row Input Pullup Resistance<br>$m^{th}$ Row Terminal: m = 1,2,3,4 | 7 | $R_{Rm}$ | 5.0 | 8.0 | 11 | kΩ |
| Column Input Pulldown Resistance<br>$n^{th}$ Column Terminal: n = 1,2,3,4 | 8 | $R_{Cn}$ | 5.0 | 8.0 | 11 | kΩ |
| Ratio of Row-to-Column Input Resistances<br>$K_{m,n} = \frac{R_{Rm}}{R_{Cn}}$, m = 1,2,3,4<br>n = 1,2,3,4 | 7 & 8 | $K_{m,n}$ | 0.88 | 1.0 | 1.12 | — |
| Row Terminal Open Circuit Voltage | 7a | $V_{ROC}$ | 950 | 1100 | 1200 | mVdc |
| Row Threshold Voltage for $m^{th}$<br>Row Terminal: m = 1,2,3,4 | 9 | $V_{Rm}$ | 0.70 $V_{ROC}$ | — | — | Vdc |
| Column Threshold Voltage for $n^{th}$<br>Column Terminal: n = 1,2,3,4 | 10 | $V_{Cn}$ | — | — | 0.30 $V_{ROC}$ | Vdc |

### LINE VOLTAGE REGULATOR

| | | | | | | |
|---|---|---|---|---|---|---|
| Voltage Regulator Output | 1a | $V_R$ | 1.0 | 1.1 | 1.2 | Volts |
| V+ Current in DTMF Mode | 2a | $I_{DT}$ | 8.0 | 12 | 14.5 | mA |
| Change in $I_{DT}$ with Change in V+ Voltage | 2b | $\Delta I_{DT}$ | — | 0.8 | 2.0 | mA |
| V+ Current in Speech Mode<br>V+ = 1.7 V<br>V+ = 5.0 V | <br>1b<br>1c | $I_{SP}$ | <br>3.0<br>8.0 | <br>5.0<br>11 | <br>7.0<br>15 | mA |
| Speech to DTMF Mode Current Difference | 3 | $\Delta I_{TR}$ | −2.0 | 2.0 | 3.5 | mA |
| LR Level Shift<br>V+ = 5.0 V, $I_{LR}$ = 10 mA<br>V+ = 18 V, $I_{LR}$ = 110 mA | <br>4a<br>4b | $\Delta V_{LR}$ | <br>2.4<br>2.6 | <br>2.9<br>3.3 | <br>3.5<br>4.0 | Vdc |
| LC Terminal Resistance | 5 | $R_{LC}$ | 30 | 50 | 75 | kΩ |
| Load Regulation | 6 | $\Delta V_R$ | −20 | −6.0 | 20 | mVdc |

2

**ELECTRICAL CHARACTERISTICS** (continued)

**SPEECH NETWORK**

| Characteristic | Test Method | Symbol | Min | Typ | Max | Unit |
|---|---|---|---|---|---|---|
| MIC Terminal Saturation Voltage | 20 | $V_{MIC}$ | — | 60 | 125 | mVdc |
| MIC Terminal Leakage Current | 21a | $I_{MIC}$ | — | 0.0 | 5.0 | μA |
| MM Terminal Input Resistance | 21b | $R_{MM}$ | 50 | 100 | 170 | kΩ |
| TXO Terminal Bias | 22a | $B_{TXO}$ | 0.48 | 0.53 | 0.68 | — |
| TXI Terminal Input Bias Current | 22b | $I_{TXI}$ | — | 50 | 400 | nA |
| TXO Terminal Positive Swing | 22c | $V_{TXO}(+)$ | — | 25 | 60 | mVdc |
| TXO Terminal Negative Swing | 22d | $V_{TXO}(-)$ | — | 130 | 200 | mVdc |
| Transmit Amplifier Closed-Loop Gain | 23a | $G_{TX}$ | 16.5 | 19 | 20 | V/V |
| Sidetone Amplifier Gain | 23b | $G_{STA}$ | 0.40 | 0.45 | 0.54 | V/V |
| STA Terminal Output Current | 24 | $I_{STA}$ | 50 | 100 | 250 | μA |
| RXO Terminal Bias | 25a | $B_{RXO}$ | 0.48 | 0.52 | 0.68 | — |
| RXI Terminal Input Bias Current | 25b | $I_{RXI}$ | — | 100 | 400 | nA |
| RXO Terminal Positive Swing | 25c | $V_{RXO}(+)$ | — | 1.0 | 20 | mVdc |
| RXO Terminal Negative Swing | 25d | $V_{RXO}(-)$ | — | 40 | 100 | mVdc |
| TXL Terminal OFF Resistance | 26a | $R_{TXL}(OFF)$ | 125 | 200 | 300 | kΩ |
| TXL Terminal ON Resistance | 26b | $R_{TXL}(ON)$ | — | 20 | 100 | Ω |
| RM Terminal OFF Resistance | 27a | $R_{RM}(OFF)$ | 125 | 180 | 300 | kΩ |
| RM Terminal ON Resistance | 27b | $R_{RM}(ON)$ | 410 | 570 | 770 | Ω |

**DTMF GENERATOR**

| | | | | | | |
|---|---|---|---|---|---|---|
| Row Tone Frequency | Row 1<br>Row 2<br>Row 3<br>Row 4 | 11a, 11b | $f_{Rm}$ | 692.9<br>765.3<br>848.9<br>935.1 | 696.4<br>769.2<br>853.2<br>939.8 | 699.9<br>773.0<br>857.5<br>944.5 | Hz |
| Column Tone Frequency | Column 1<br>Column 2<br>Column 3<br>Column 4 | 11c, 11d | $f_{Cn}$ | 1201.6<br>1330.2<br>1471.9<br>1625.2 | 1207.7<br>1336.9<br>1479.3<br>1633.4 | 1213.7<br>1343.6<br>1486.7<br>1641.5 | Hz |
| Row Tone Amplitude | | 11e | $V_{Row}$ | 0.38 | 0.45 | 0.55 | $V_{rms}$ |
| Column Tone Amplitude | | 11f | $V_{Col}$ | 0.48 | 0.55 | 0.67 | $V_{rms}$ |
| Column Tone Pre-emphasis | | 11g | $dB_{CR}$ | 0.5 | 1.8 | 3.0 | dB |
| DTMF Distortion | | 12 | % Dis | — | 4.0 | 6.0 | % |
| DTMF Output Resistance | | 13 | $R_o$ | 1.0 | 2.5 | 3.0 | kΩ |

**EQUALIZATION CONTROL**

| | | | | | | |
|---|---|---|---|---|---|---|
| ES Terminal OFF Resistance | 34a | $R_{ES}(OFF)$ | 100 | 200 | 325 | kΩ |
| Equalization Threshold Voltage | 34b | $V_E$ | 1.4 | 1.6 | 2.0 | Vdc |
| Equalization Threshold Hysteresis | 34c | $\Delta V_E$ | 75 | 200 | 300 | mVdc |
| EV Terminal OFF Resistance | 35a | $R_{EV}(OFF)$ | 100 | 200 | 325 | kΩ |
| EV Terminal ON Resistance | 35b | $R_{EV}(ON)$ | — | 20 | 50 | Ω |

**ELECTRICAL CHARACTERISTICS** (continued)

**TONE RINGER**

| Characteristic | Test Method | Symbol | Min | Typ | Max | Unit |
|---|---|---|---|---|---|---|
| TRI Terminal Voltage | 14 | $V_{TRI}$ | 20 | 21.5 | 23 | Vdc |
| TRS Terminal Input Current<br>$V_{TRS}$ = 24 volts<br>$V_{TRS}$ = 30 volts | <br>15a<br>15b | $I_{TRS}$ | <br>70<br>0.4 | <br>120<br>0.8 | <br>170<br>1.5 | <br>μA<br>mA |
| TRF Threshold Voltage | 16a | $V_{TRF}$ | 1.2 | 1.6 | 1.9 | Vdc |
| TRF Threshold Hysteresis | 16b | $\Delta V_{TRF}$ | 100 | 200 | 400 | mVdc |
| TRF Filter Resistance | 17 | $R_{TRF}$ | 30 | 50 | 75 | kΩ |
| High Tone Frequency | 18 | $f_H$ | 920 | 1000 | 1080 | Hz |
| Low Tone Frequency | 18 | $f_L$ | 736 | 800 | 864 | Hz |
| Warble Frequency | 18 | $f_W$ | 11.5 | 12.5 | 13.5 | Hz |
| Tone Ringer Output Voltage | 19 | $V_{o(p-p)}$ | 18 | 20 | 22 | Vp-p |

**FIGURE 8 — GENERAL TEST CIRCUIT**

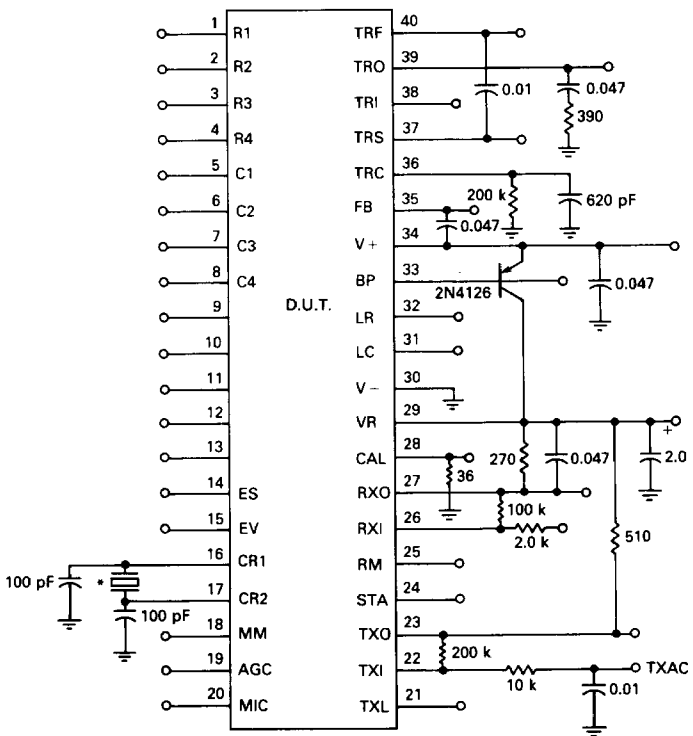


Notes:
1. *Selected ceramic resonator: 500 kHz ±2.0 kHz.
2. Capacitances in μF unless noted.
3. All resistances in ohms.
4. Pin numbers in this Figure and in Test Circuits are for the DIP package.

**FIGURE 9 — TEST ONE**

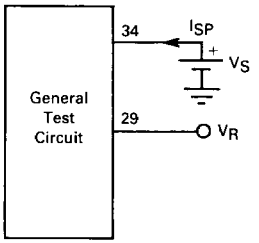


a. Measure $V_R$ with $V_S$ = 1.7 V
b. Measure $I_{SP}$ with $V_S$ = 1.7 V
c. Measure $I_{SP}$ with $V_S$ = 5.0 V

**FIGURE 10 — TEST TWO**

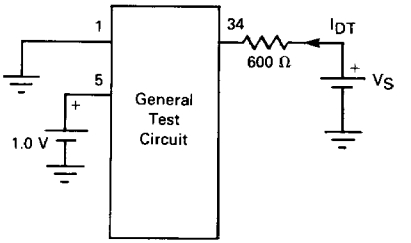


a. Measure $I_{DT}$ with $V_S$ = 11.5 V
b. Measure $I_{DT}$ with $V_S$ = 26 V. Calculate $\Delta I_{DT} = I_{DT}\big|_{26\ V} - I_{DT}\big|_{11.5\ V}$

**FIGURE 11 — TEST THREE**

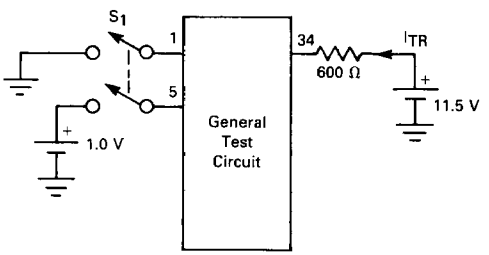


With $S_1$ open measure $I_{TR}$. Close $S_1$ and again measure $I_{TR}$. Calculate:

$$\Delta I_{TR} = I_{TR}\big|_{S_1\ Closed} - I_{TR}\big|_{S_1\ Open}$$

**FIGURE 12 — TEST FOUR**

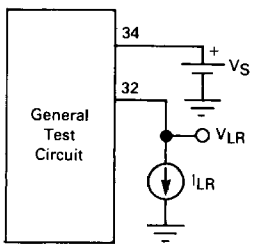


a. Set $V_S$ = 5.0 V and $I_{LR}$ = 10 mA. Measure $V_{LR}$. Calculate $\Delta V_{LR} = V_S - V_{LR}$
b. Repeat Test 4a with $V_S$ = 18 V and $I_{LR}$ = 110 mA

**FIGURE 13 — TEST FIVE**

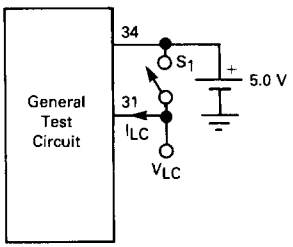


With $S_1$ open measure $V_{LC}$.
Close $S_1$ and measure $I_{LC}$.
Calculate:

$$R_{LC} = \frac{5.0 - V_{LC}}{I_{LC}}$$

**FIGURE 14 — TEST SIX**

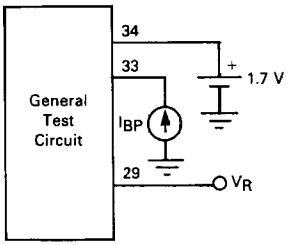


Set $I_{BP}$ = 0.0 $\mu$A and measure $V_R$.
Set $I_{BP}$ = 150 $\mu$A and measure $V_R$. Calculate:

$$\Delta V_R = V_R\Big|_{0.0\ \mu A} - V_R\Big|_{150\ \mu A}$$

**FIGURE 15 — TEST SEVEN**

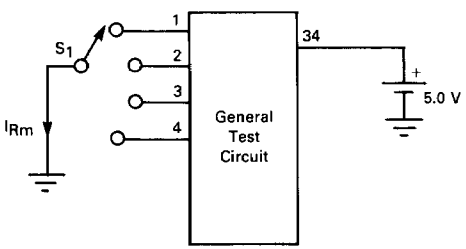


Subscript m corresponds to row number.

a. Set $S_1$ to Terminal 2 and measure voltage at Terminal 1 ($V_{ROC}$).
b. Set $S_1$ to Terminal 1 (m = 1) and measure $I_{R1}$. Calculate:
$R_{R1} = V_{ROC} \div I_{R1}$
c,d,e. Repeat Test 7b for m = 2,3,4.

**FIGURE 16 — TEST EIGHT**

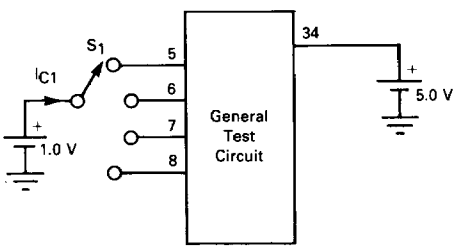


Subscript n corresponds to column number.

a. Set $S_1$ to Terminal 5 (n = 1) and measure $I_{C1}$. Calculate:
$R_{C1} = 1.0\ V \div I_{C1}$
b,c,d. Repeat Test 8a for n = 2,3,4.

**FIGURE 17 — TEST NINE**

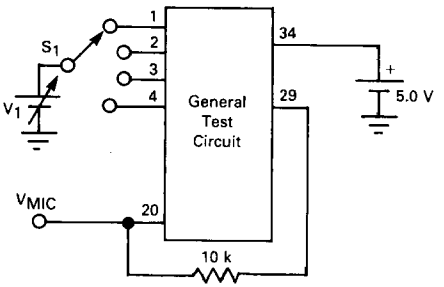


m corresponds to row number.

a. Set $S_1$ to Terminal 1 (m = 1) with $V_1$ = 1.0 Vdc. Verify $V_{MIC}$ is Low ($V_{MIC}$ < 0.3 Vdc). Decrease $V_1$ to 0.70 $V_{ROC}$ and verify $V_{MIC}$ switches high. ($V_{MIC}$ > 0.5 Vdc). $V_{ROC}$ is obtained from Test 7a.

b,c,d. Repeat Test 9a for rows 2,3, and 4. (m = 2,3,4)

**FIGURE 18 — TEST TEN**

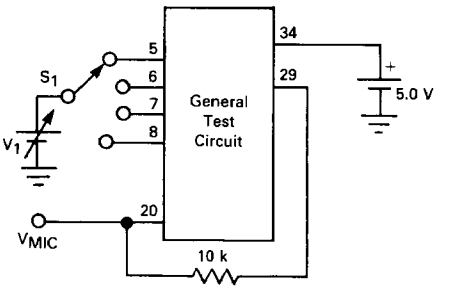


n corresponds to column number.

a. Set $S_1$ to Terminal 5 (n = 1) with $V_1$ = 0 Vdc. Verify $V_{MIC}$ is low ($V_{MIC}$ < 0.3 Vdc). Increase $V_1$ to 0.30 $V_{ROC}$ and verify $V_{MIC}$ switches high. ($V_{MIC}$ > 0.5 Vdc). $V_{ROC}$ is obtained from Test 7a.

b,c,d. Repeat Test 10a for columns 2,3, and 4. (n = 2,3,4)

**FIGURE 19 — TEST ELEVEN**

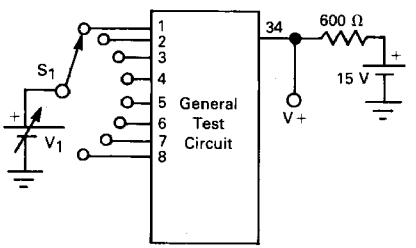


m corresponds to row number.
n corresponds to column number.

a. With $V_1$ = 0.0 V set $S_1$ to Terminal 1 (m = 1) and measure frequency of tone at V+.

b. Repeat Test 11a for rows 2,3 and 4. (m = 2,3,4).

c. With $V_1$ = 1.0 V set $S_1$ to Terminal 5. (n = 1) and measure frequency of tone at V+.

d. Repeat Test for columns 2,3, and 4. (n = 2,3,4).

e. Set $S_1$ to Terminal 4 and $V_1$ = 0.0 V. Measure row tone amplitude at V+ ($V_{ROW}$).

f. Set $S_1$ to Terminal 8 and $V_1$ = 1.0 V. Measure column tone amplitude at V+. ($V_{COL}$).

g. Using results of Tests 11e and 11f, calculate:

$$dB_{CR} = 20 \log_{10} \frac{V_{COL}}{V_{ROW}}$$

**FIGURE 20 — TEST TWELVE**

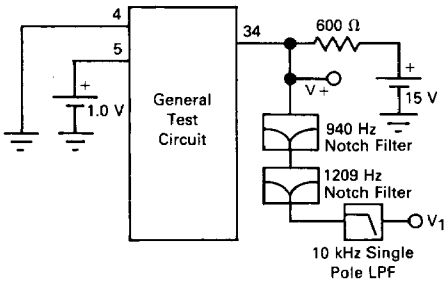


Note: The notch filters must have 50 dB attenuation at their respective center frequencies.

Measure V+ and $V_1$ with a true rms voltmeter. Calculate:

$$\% \text{ DIS} = \frac{V_1(\text{rms})}{V+(\text{rms})} \times 100$$

**FIGURE 21 — TEST THIRTEEN**

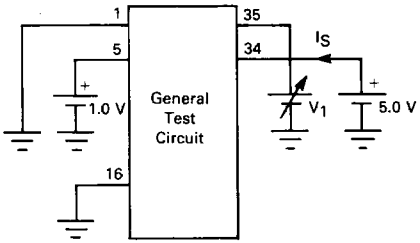


Measure $I_S$ at $V_1$ = 1.8 V and $V_1$ = 2.8 V.

Calculate:

$$R_O = 1.0\text{ V} \div \left[ I_S\Big|_{2.8\text{ V}} - I_S\Big|_{1.8\text{ V}} \right]$$

**FIGURE 22 — TEST FOURTEEN**

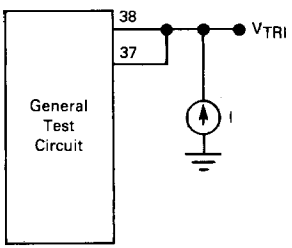


Set I = 1.0 mA and measure $V_{TRI}$.

**FIGURE 23 — TEST FIFTEEN**

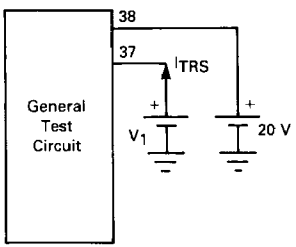


a. Measure $I_{TRS}$ with $V_1$ = 24 V.
b. Measure $I_{TRS}$ with $V_1$ = 30 V.

**FIGURE 24 — TEST SIXTEEN**

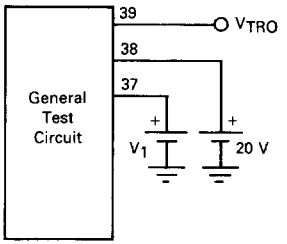


a. Increase $V_1$ from 21 V until $V_{TRO}$ switches on. Note that $V_{TRO}$ will be an 16 $V_{pp}$ square wave. Record this value of $V_1$. Calculate:

$V_{TRF} = V_1 - 20\ V$

b. Decrease $V_1$ from its setting in Test 16a until $V_{TRO}$ ceases switching. Record this value of $V_1$. Calculate:

$\Delta V_{TRF} = V_1\Big|_{\substack{Test\\16a}} - V_1\Big|_{\substack{Test\\16b}}$

**FIGURE 25 — TEST SEVENTEEN**

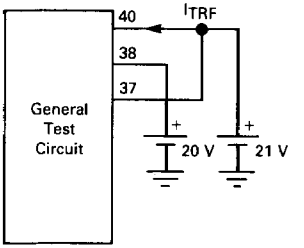


Measure $I_{TRF}$. Calculate: $R_{TRF} = 1.0 \div I_{TRF}$.

**FIGURE 26 — TEST EIGHTEEN**

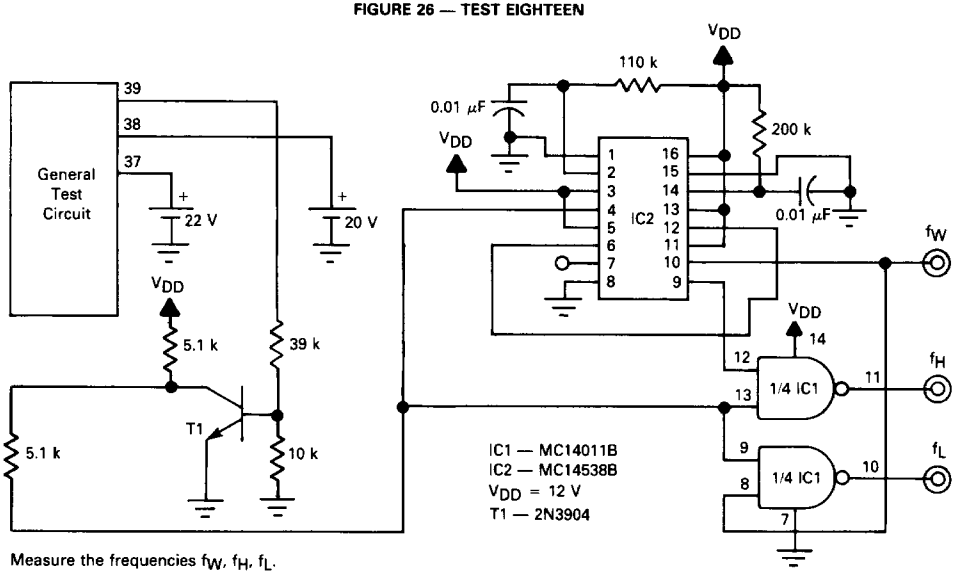


Measure the frequencies $f_W$, $f_H$, $f_L$.

**FIGURE 27 — TEST NINETEEN**

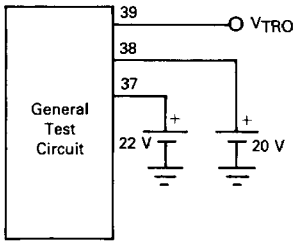


Measure $V_{TRO}$ peak-to-peak voltage swing.
Using $V_{TRI}$ from Test 14 Calculate:

$V_{o(p-p)} = V_{TRI} - 20\ V + V_{TRO}$

**FIGURE 28 — TEST TWENTY**

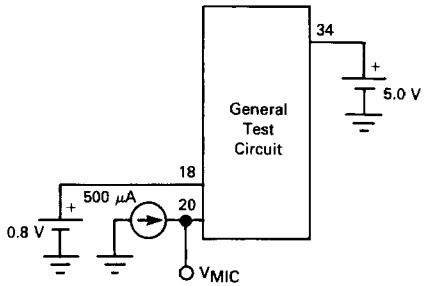


Measure $V_{MIC}$

**FIGURE 29 — TEST TWENTY-ONE**

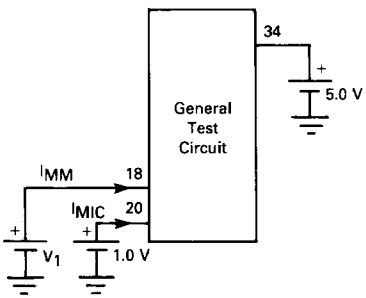


a. Set $V_1$ = 2.0 V and measure $I_{MIC}$.
b. Set $V_1$ = 5.0 V and measure $I_{MM}$.
Calculate: $R_{MM} = 5.0\ V \div I_{MM}$

**FIGURE 30 — TEST TWENTY-TWO**

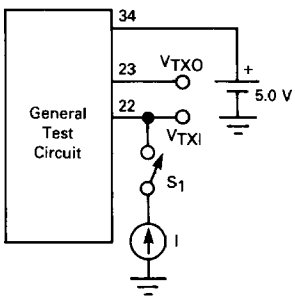


a. With $S_1$ open, measure $V_{TXO}$. Using $V_R$ obtained in Test 1 Calculate: $B_{TXO} = V_{TXO} \div V_R$
b. With $S_1$ open, measure $V_{TXO}$ and $V_{TXI}$. Calculate: $I_{TXI} = (V_{TXO} - V_{TXI}) \div 200\ k\Omega$
c. Close $S_1$ and set I = −10 μA. Measure $V_{TXO}$. Calculate: $V_{TXO}(+) = V_R - V_{TXO}$ where $V_R$ is obtained from Test 1.
d. Close $S_1$ and set I = +10 μA. Measure $V_{TXO}$. $V_{TXO}(-) = V_{TXO}$.

**FIGURE 31 — TEST TWENTY-THREE**

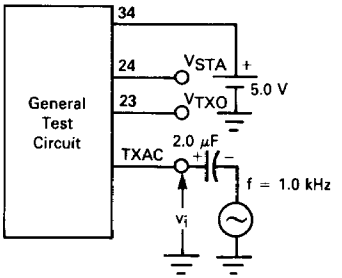


a. Set the generator for $v_i$ = 3.0 $mV_{rms}$. Measure ac voltage $V_{TXO}$. Calculate:

$$G_{TX} = \frac{V_{TXO}}{v_i}$$

b. Measure ac voltage $V_{STA}$. Using $V_{TXO}$ from Test 23a calculate:

$$G_{STA} = \frac{V_{STA}}{V_{TXO}}$$

**FIGURE 32 — TEST TWENTY-FOUR**

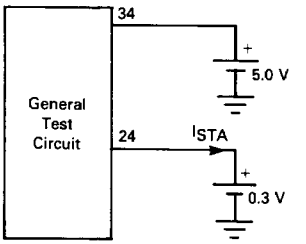


Measure $I_{STA}$.

**FIGURE 33 — TEST TWENTY-FIVE**

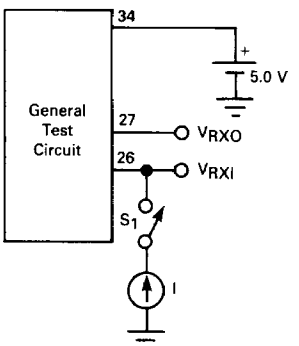


a. With $S_1$ open, measure $V_{RXO}$. Using $V_R$ obtained in Test 1, calculate: $B_{RXO} = V_{RXO} \div V_R$.

b. With $S_1$ open, measure $V_{RXO}$ and $V_{RXI}$. Calculate: $I_{RXI} = (V_{RXO} - V_{RX1}) \div 100\ k\Omega$

c. Close $S_1$ and set I = −10 μA. Measure $V_{RXO}$. Using $V_R$ obtained in Test 1, calculate: $V_{RXO}(+) = V_R - V_{RXO}$.

d. Close $S_1$ and set I = +10 μA and measure $V_{RXO}$. $V_{RXO}(-) = V_{RXO}$.

**FIGURE 34 — TEST TWENTY-SIX**

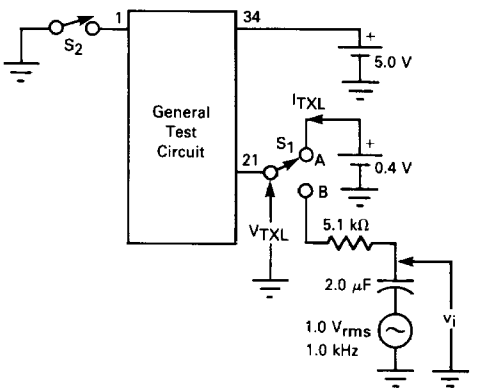


a. Set $S_1$ to position A with $S_2$ open. Measure $I_{TXL}$. Calculate: $R_{TXL}$ (OFF) = 0.4 V ÷ $I_{TXL}$.

b. Set $S_1$ to position B and close $S_2$. Measure ac voltages $v_i$ and $V_{TXL}$. Calculate:

$$R_{TXL}\ (ON) = \frac{V_{TXL}}{v_i - V_{TXL}} \times 5.1\ k\Omega$$

**FIGURE 35 — TEST TWENTY-SEVEN**

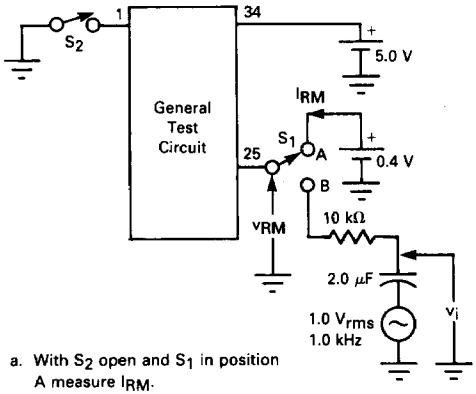


a. With $S_2$ open and $S_1$ in position A measure $I_{RM}$.

Calculate: $R_{RM}(OFF) = 0.4\ V \div I_{RM}$

b. Close $S_2$ and switch $S_1$ to position B. Measure ac voltages $v_i$ and $V_{RM}$.

Calculate:

$$R_{RM}(ON) = \frac{V_{RM}}{v_i - V_{RM}} \times 10\ k\Omega$$

**Note: Tests 28–33 intentionally omitted.**

**FIGURE 36 — TEST THIRTY-FOUR**

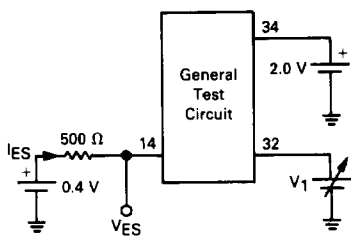


a. Set $V_1$ = 0 V. Measure $I_{ES}$. Calculate R (OFF) = 0.4 ÷ $I_{ES}$.

b. Increase $V_1$ until $V_{ES}$ SWITCHES low (<200 mV). Measure $V_1$. $V_E = V_1$.

c. Decrease $V_1$ from the value in Test 34b until $V_{ES}$ switches high (>200 mV). Measure $V_1$. Calculate $\Delta V_E = V_1 - V_1$

Test 34b Test 34c

**FIGURE 37 — TEST THIRTY-FIVE**

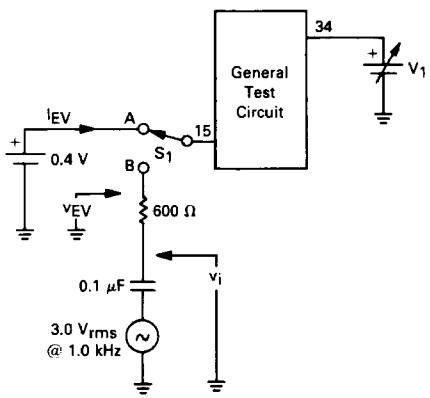


a. With $S_1$ in position A set $V_1$ = 2.0 V. Measure $I_{EV}$ Calculate $R_{EV}(OFF) = 0.4 \div I_{EV}$.

b. Set $V_1$ = 5.0 V and Set $S_1$ to position B. Measure $v_i$ and $v_{EV}$. Calculate

$$R_{EV}(ON) = \frac{v_{EV}}{v_i - v_{EV}} \times 600\ \Omega$$

## APPLICATIONS INFORMATION

Figure 38 specifies a typical application circuit for the MC34011A. Complete listings of external components are provided at the end of this section along with nominal component values.

The hook switch and polarity guard bridge configuration is one of several options. If two bridges are used, one for the tone ringer and the other for speech and dialer circuits, then the hook switch can be simplified. Component values should be varied to optimize telephone performance parameters for each application. The relationships between the application circuit components and certain telephone parameters are briefly described in the following:

**On-Hook Input Impedance**

R1, C17, and Z3 are the significant components for on-hook impedance. C17 dominates at low frequencies, R1 at high frequencies and Z3 provides the non-linearity required for 2.5 V and 10 V impedance signature tests. C17 must generally be $\leq$ 1.0 $\mu$F to satisfy 5.0 Hz impedance specifications. (EIA RS-470)

**Tone Ringer Output Frequencies**

R3 and C13 control the frequency ($f_O$) of a relaxation oscillator. Typically $f_O = (R3C13 + 8.0\ \mu s)^{-1}$. The output tone frequencies are $f_O/10$ and $f_O/8$. The warble rate is $f_O/640$. The tone ringer will operate with $f_O$ from 1.0 kHz to 10 kHz. R3 should be limited to values between 150 k and 300 k.

**Tone Ringer Input Threshold**

After R1, C17, and Z3 are chosen to satisfy on-hook impedance specifications, R2 is chosen for the desired ring start threshold. Increasing R2 reduces the ac input voltage required to activate the tone ringer output. R2 should be limited to values between 0.8 k and 2.0 kΩ.

**Off-Hook DC Resistance**

R4 conducts the dc line current in excess of the speech and dialer bias current. Increasing R4 increases the input resistance of the telephone for line currents above 10 mA. R4 should be selected between 30 Ω and 120 Ω.

**Off-Hook AC Impedance**

The ac input impedance is equal to the receive amplifier load impedance (at RXO) divided by the receive amplifier gain (voltage gain from V+ to RXO). Increasing the impedance of the receiver increases the impedance of the telephone. Increasing the gain of the receiver amplifier decreases the impedance of the telephone.

**DTMF Output Amplitude**

R14 controls the amplitude of the row and column DTMF tones. Decreasing R14 increases the level of tones generated at V+. The ratio of the row and column tone amplitudes is internally fixed. R14 should be greater than 20 Ω to avoid excessive current in the DTMF output amplifier.

**Transmit Output Level**

R10 controls the maximum signal amplitude produced at V+ by the transmit amplifier. Decreasing R10 increases the transmit output signal at V+. R10 should be greater than 220 Ω to limit current in the transmit amplifier output.

**Transmit Gain**

The gain from the microphone to the telephone line varies directly with R11. Increasing R11 increases the signal applied to R10 and the ac current driven through R10 to the telephone line. The closed loop-gain from the microphone to the TXO terminal should be greater than 10 to prevent transmit amplifier oscillations.

Note: Adjustments to transmit level and gain are complicated by the addition of receiver sidetone current to the transmit amplifier output current at V+. Normally the sidetone current from the receiver will increase the transmit signal (if the current in the receiver is in phase with that in R10). Thus the transmit gain and sidetone levels cannot be adjusted independently.

**Receiver Gain**

Feedback resistor R6 adjusts the gain at the receiver amplifier. Increasing R6 increases the receiver amplifier gain.

**Sidetone Level**

Sidetone reduction is achieved by the cancellation of receiver amplifier input signals from R9 and R5. R8, R15, and C6 determine the phase of the sidetone balance signal in R9. The ac voltage at the junction of R8 and R9 should be 180° out of phase with the voltage at V+. R9 is selected such that the signal current in R9 is slightly greater than that in R5. This insures that the sidetone current in the receiver adds to the transmit amplifier output current.

**Equalization of Speech Network**

Resistors R17 and R18 are switched into the circuit when the voltage at the LR terminal exceeds the equalization threshold voltage (typically 1.65 V). R17 reduces the transmit and receive gains for loop currents greater than the threshold (short loops) by attenuating signals at tip and ring. R18 reduces the sidetone level which would otherwise increase when R17 is switched into the circuit. The voltage $V_{LR}$ at LR terminal is given by

$V_{LR} = (I_L - I_S) \times R4$.

where $I_L$ = loop current

$I_S$ = dummy load current (6.0 mA) + speech network current (4.0 mA).

Thus resistor R4 is selected to activate the equalization circuit at the desired loop current. However, R4 must be selected keeping in mind the fact that it also controls the dc resistance of the telephone. Capacitors C18 and C19 prevent dc current flow into the EV and ES terminals. This reduces clicks and also prevents changes in the dc characteristic of the telephone when the EV and ES terminals are switched to low impedance.

2

FIGURE 38 — ELECTRONIC TELEPHONE APPLICATION CIRCUIT

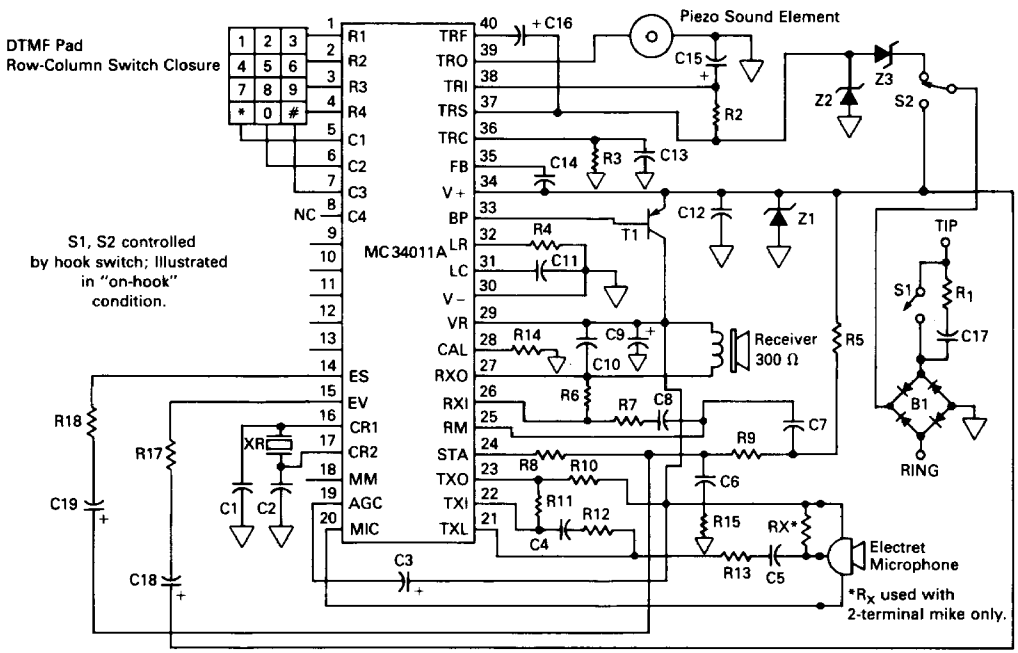

## EXTERNAL COMPONENTS

(Component Labels Referenced to Figure 38)

| Capacitors | Nominal Value | Description |
|---|---|---|
| C1, C2 | 100 pF | Ceramic Resonator oscillator capacitors. |
| C3 | 1.0 μF, 3.0 V | Transmit limiter low-pass filter capacitor: controls attack and decay time of transmit peak limiter. |
| C4, C5 | 0.1 μF | Transmit amplifier input capacitors: prevent dc current flow into TXL pin and attenuate low-frequency noise on microphone lead. |
| C6 | 0.05 μF | Sidetone network capacitor: provides phase-shift in sidetone path to match that caused by telephone line reactance. |
| C7, C8 | 0.05 μF | Receiver amplifier input capacitors: prevent dc current flow into RM terminal and attenuates low frequency noise on the telephone line. |
| C9 | 2.2 μF, 3.0 V | VR regulator capacitor: frequency compensates the VR regulator to prevent oscillation. |
| C10 | 0.01 μF | Receiver amplifier output capacitor: frequency compensates the receiver amplifier to prevent oscillation. |
| C11 | 0.1 μF | DC load filter capacitor: prevents the dc load circuit from attenuating ac signals on V+. |
| C12 | 0.01 μF | Telephone line bypass capacitor: terminates telephone line for high frequency signals and prevents oscillation in the VR regulator. |
| C13 | 620 pF | Tone ringer oscillator capacitor: determines clock frequency for tone and warble frequency synthesizers. |
| C14 | 0.1 μF | DTMF output feedback capacitor: ac couples feedback around the DTMF output amplifier which reduces output impedance. |
| C15 | 4.7 μF, 25 V | Tone ringer input capacitor: filters the rectified tone ringer input signal to smooth the supply potential for oscillator and output buffer. |
| C16 | 1.0 μF, 10 V | Tone ringer filter capacitor: integrates the voltage from current sense resistor R2 at the input of the threshold detector. |
| C17 | 1.0 μF, 250 Vac Non-polarized | Tone ringer line capacitor: ac couples the tone ringer to the telephone line; partially controls the on-hook input impedance of telephone. |
| C18 | 25 μF, 25 V | Speech equalization coupling capacitor. Prevents dc current flow into EV terminal. (optional) |
| C19 | 5.0 μF, 3.0 V | Sidetone equalization coupling capacitor. Prevents dc current flow into ES terminal. (optional) |

| Resistors | Nominal Value | Description |
|---|---|---|
| R1 | 6.8 k | Tone ringer input resistor: limits current into the tone ringer from transients on the telephone line and partially controls the on-hook impedance of the telephone. |
| R2 | 1.8 k | Tone ringer current sense resistor: produces a voltage at the input of the threshold detector in proportion to the tone ringer input current. |
| R3 | 200 k | Tone ringer oscillator resistor: determines the clock frequency for tone and warble frequency synthesizers. |
| R4 | 82, 1.0 W | DC load resistor: conducts all dc line current in excess of the current required for speech or dialing circuits; controls the off-hook dc resistance of the telephone. |
| R5, R7 | 150 k, 56 k | Receiver amplifier input resistors: couple ac input signals from the telephone line to the receiver amplifier; signal in R5 subtracts from that in R9 to reduce sidetone in receiver. |
| R6 | 200 k | Receiver amplifier feedback resistor: controls the gain of the receiver amplifier. |
| R8, R9 | 1.5 k, 30 k | Sidetone network resistors: drive receiver amplifier input with the inverted output signal from the transmitter; phase of signal in R9 should be opposite that in R5. |
| R10 | 270 | Transmit amplifier load resistor: converts output voltage of transmit amplifier into a current that drives the telephone line; controls the maximum transmit level. |
| R11 | 200 k | Transmit amplifier feedback resistor: controls the gain of the transmit amplifier. |
| R12, R13 | 4.7 k, 4.7 k | Transmit amplifier input resistors: couple signal from microphone to transmit amplifier; control the dynamic range of the transmit peak limiter. |
| R14 | 36 | DTMF calibration resistor: controls the output amplitude of the DTMF dialer. |
| R15 | 2.0 k | Sidetone network resistor (optional): reduces phase shift in sidetone network at high frequencies. |
| R17 | 600 | Speech equalization resistor. Reduces transmit and receive gain when EV terminal switches on. (optional) |
| R18 | 5.1 k | Sidetone equalization resistor. Reduces sidetone level when ES terminal switches on. (optional) |
| $R_X$ | 3.0 k | Microphone bias resistor: sources current from VR to power a 2-terminal electret microphone; $R_X$ is not used with 3-terminal microphones. |

**EXTERNAL COMPONENTS** (continued)

| Semiconductors | Electret Mic | Receiver |
|---|---|---|
| B1 = MDA101A, or equivalent, or 4-1N4005<br>T1 = 2N4126 or equivalent<br>Z1 = 18 V, 1.5 W, 1N5931A<br>Z2 = 30 V, 1.5 W, 1N5936A<br>Z3 = 4.7 V, 1/2 W, 1N750<br>XR — muRata Erie CSB 500 kHz Resonator, or equivalent<br>Piezo — PBL 5030BC Toko Buzzer or equivalent | 2 Terminal, Primo EM-95 (Use $R_X$) or equivalent<br>3 Terminal, Primo 07A181P (Remove $R_X$) or equivalent | Primo Model DH-34 (300 Ω) or equivalent |

**Motorola Inc. does not endorse or warrant the suppliers referenced.**