CY7C419/21/25/29/33

256/512 /1K /2K/4K x 9 Asynchronous FIFO

Features

- **Asynchronous first-in first-out (FIFO) buffer memories**
- **256 x 9 (CY7C419)**
- **512 x 9 (CY7C421)**
- **1K x 9 (CY7C425)**
- **2K x 9 (CY7C429)**
- **4K x 9 (CY7C433)**
- **Dual-ported RAM cell**
- **High-speed 50.0-MHz read/write independent of depth/width**
- **Low operating power: I_{CC} = 35 mA**
- **Empty and Full flags (Half Full flag in standalone)**
- **TTL compatible**
- **Retransmit in standalone**
- **Expandable in width**
- **PLCC, 7x7 TQFP, SOJ, 300-mil and 600-mil DIP**
- **Pin compatible and functionally equivalent to IDT7200, IDT7201, IDT7202, IDT7203, IDT7204, AM7200, AM7201, AM7202, AM7203, and AM7204**

Functional Description

The CY7C419, CY7C420/1, CY7C424/5, CY7C428/9, and CY7C432/3 are first-in first-out (FIFO) memories offered in 600-mil wide and 300-mil wide packages. They are, respectively, 256, 512, 1,024, 2,048, and 4,096 words by 9-bits wide. Each FIFO memory is organized such that the data is read in the same sequential order that it was written. Full and Empty flags are provided to prevent overrun and underrun. Three additional pins are also provided to facilitate unlimited expansion in width, depth, or both. The depth expansion technique steers the control signals from one device to another in parallel, thus eliminating the serial addition of propagation delays, so that throughput is not reduced. Data is steered in a similar manner.

The read and write operations may be asynchronous; each can occur at a rate of 50.0 MHz. The write operation occurs when the write ($\overline{W}$) signal is LOW. Read occurs when read ($\overline{R}$) goes LOW. The nine data outputs go to the high-impedance state when $\overline{R}$ is HIGH.

A Half Full ($\overline{HF}$) output flag is provided that is valid in the standalone and width expansion configurations. In the depth expansion configuration, this pin provides the expansion out ($\overline{XO}$) information that is used to tell the next FIFO that it will be activated.

In the standalone and width expansion configurations, a LOW on the retransmit ($\overline{RT}$) input causes the FIFOs to retransmit the data. Read enable ($\overline{R}$) and write enable ($\overline{W}$) must both be HIGH during retransmit, and then $\overline{R}$ is used to access the data.

The CY7C419, CY7C420, CY7C421, CY7C424, CY7C425, CY7C428, CY7C429, CY7C432, and CY7C433 are fabricated using an advanced 0.65-micron P-well CMOS technology. Input ESD protection is greater than 2000V and latch-up is prevented by careful layout and guard rings.

Logic Block Diagram

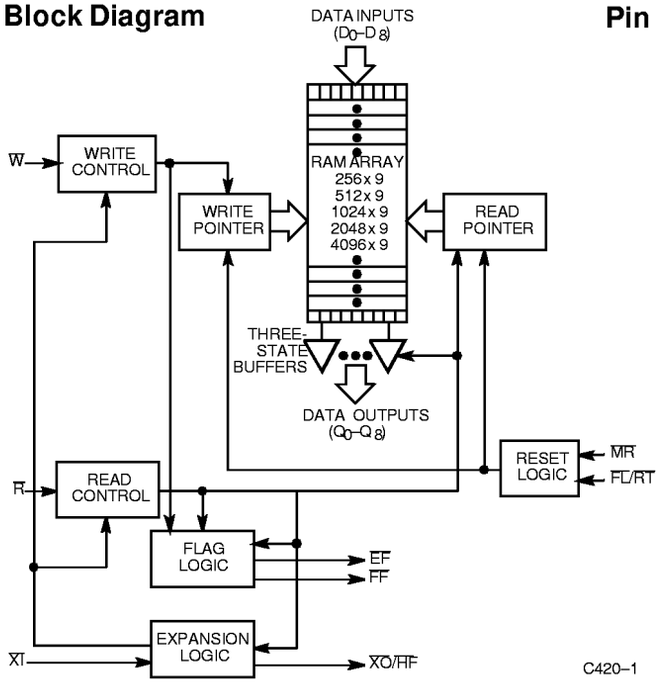

Pin Configurations

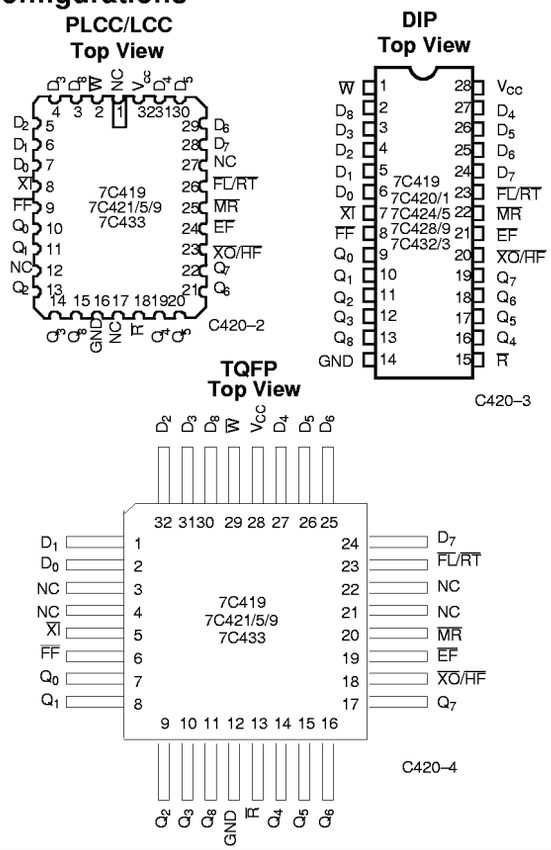

Selection Guide

256 x 9	**7C419–10**	**7C419–15**			**7C419–30**	**7C419–40**	
512 x 9 (600-mil only)			**7C420–20**	**7C420–25**		**7C420–40**	**7C420–65**
512 x 9	**7C421–10**	**7C421–15**	**7C421–20**	**7C421–25**	**7C421–30**	**7C421–40**	**7C421–65**
1K x 9 (600-mil only)			**7C424–20**	**7C424–25**	**7C424–30**	**7C424–40**	**7C424–65**
1K x 9	**7C425–10**	**7C425–15**	**7C425–20**	**7C425–25**	**7C425–30**	**7C425–40**	**7C425–65**
2K x 9 (600-mil only)			**7C428–20**				**7C428–65**
2K x 9	**7C429–10**	**7C429–15**	**7C429–20**	**7C429–25**	**7C429–30**	**7C429–40**	**7C429–65**
4K x 9 (600-mil only)				**7C432–25**		**7C432–40**	
4K x 9	**7C433–10**	**7C433–15**	**7C433–20**	**7C433–25**	**7C433–30**	**7C433–40**	**7C433–65**
Frequency (MHz)	50	40	33.3	28.5	25	20	12.5
Maximum Access Time (ns)	10	15	20	25	30	40	65
I_{CC1} (mA)	35	35	35	35	35	35	35

Maximum Rating

(Above which the useful life may be impaired. For user guidelines, not tested.)

Storage Temperature .....–65°C to +150°C

Ambient Temperature with Power Applied .....–55°C to +125°C

Supply Voltage to Ground Potential ..... –0.5V to +7.0V

DC Voltage Applied to Outputs in High Z State.....–0.5V to +7.0V

DC Input Voltage .....–0.5V to +7.0V

Power Dissipation 1.0W

Output Current, into Outputs (LOW)..... 20 mA

Static Discharge Voltage ..... >2000V (per MIL–STD–883, Method 3015)

Latch-Up Current..... >200 mA

Operating Range

Range	Ambient Temperature[1]	V_{CC}
Commercial	0°C to + 70°C	5V ± 10%
Industrial	–40°C to +85°C	5V ± 10%
Military	–55°C to +125°C	5V ± 10%

Electrical Characteristics Over the Operating Range[2]

Parameter	Description	Test Conditions		7C419–10, 15, 30, 40 7C420/1–10, 15, 20, 25, 30, 40, 65 7C424/5–10, 15, 20, 25, 30, 40, 65 7C428/9–10, 15, 20, 25, 30, 40, 65 7C432/3–10, 15, 20, 25, 30, 40, 65		Unit
				Min.	Max.	
V_{OH}	Output HIGH Voltage	V_{CC} = Min., I_{OH} = –2.0 mA		2..4		V
V_{OL}	Output LOW Voltage	V_{CC} = Min., I_{OL} = 8.0 mA			0.4	V
V_{IH}	Input HIGH Voltage		Com'l	2.0	V_{CC}	V
			Mil/Ind	2.2	V_{CC}	
V_{IL}	Input LOW Voltage			Note 3	0.8	V
I_{IX}	Input Leakage Current	GND ≤ V_I ≤ V_{CC}		–10	+10	µA
I_{OZ}	Output Leakage Current	$\overline{R}$ ≥ V_{IH}, GND ≤ V_O ≤ V_{CC}		–10	+10	µA
I_{OS}	Output Short Circuit Current[4]	V_{CC} = Max., V_{OUT} = GND			–90	mA

Electrical Characteristics Over the Operating Range[2] (continued)

Parameter	Description	Test Conditions		7C419–10 7C421–10 7C425–10 7C429–10 7C433–10		7C419–15 7C421–15 7C425–15 7C429–15 7C433–15		7C420–20 7C421–20 7C424–20 7C425–20 7C428–20 7C429–20 7C433–20		7C420–25 7C421–25 7C424–25 7C425–25 7C429–25 7C432–25 7C433–25		Unit
				Min.	Max.	Min.	Max.	Min.	Max.	Min.	Max.	
I_{CC}	Operating Current	V_{CC} = Max., I_{OUT} = 0 mA f = f_{MAX}	Com'l		85		65		55		50	mA
			Mil/Ind				100		90		80	
I_{CC1}	Operating Current	V_{CC} = Max., I_{OUT} = 0 mA F = 20 MHz	Com'l		35		35		35		35	mA
I_{SB1}	Standby Current	All Inputs = V_{IH} Min.	Com'l		10		10		10		10	mA
			Mil/Ind				15		15		15	
I_{SB2}	Power-Down Current	All Inputs ≥ V_{CC} –0.2V	Com'l		5		5		5		5	mA
			Mil/Ind				8		8		8	

Notes:
1. T_A is the "instant on" case temperature.
2. See the last page of this specification for Group A subgroup testing information.
3. V_{IL} (Min.) = –2.0V for pulse durations of less than 20 ns.
4. For test purposes, not more than one output at a time should be shorted. Short circuit test duration should not exceed 30 seconds.

Electrical Characteristics Over the Operating Range[2] (continued)

Parameter	Description	Test Conditions		7C419–30 7C421–30 7C424–30 7C425–30 7C429–30 7C433–30		7C419–40 7C420–40 7C421–40 7C424–40 7C425–40 7C429–40 7C432–40 7C433–40		7C420–65 7C421–65 7C424–65 7C425–65 7C428–65 7C429–65 7C433–65		Units
				Min.	Max.	Min.	Max.	Min.	Max.	
I_{CC}	Operating Current	V_{CC} = Max., I_{OUT} = 0 mA f = f_{MAX}	Com'l		40		35		35	mA
			Mil/Ind		75		70		65	
I_{CC1}	Operating Current	V_{CC} = Max., I_{OUT} = 0 mA F = 20 MHz	Com'l		35		35		35	mA
I_{SB1}	Standby Current	All Inputs = V_{IH} Min.	Com'l		10		10		10	mA
			Mil		15		15		15	
I_{SB2}	Power-Down Current	All Inputs ≥ V_{CC} −0.2V	Com'l		5		5		5	mA
			Mil		8		8		8	

Capacitance[5]

Parameter	Description	Test Conditions	Max.	Unit
C_{IN}	Input Capacitance	T_A = 25°C, f = 1 MHz, V_{CC} = 4.5V	6	pF
C_{OUT}	Output Capacitance		6	pF

Note:
5. Tested initially and after any design or process changes that may affect these parameters.

AC Test Loads and Waveforms

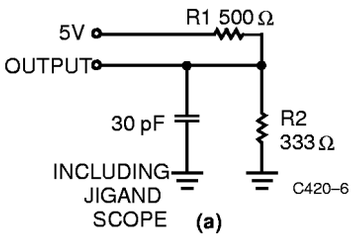

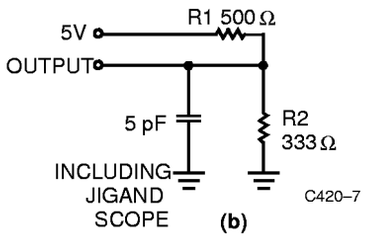

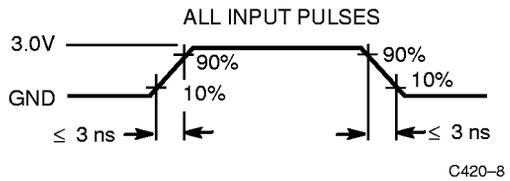

Equivalent to: THÉVENIN EQUIVALENT

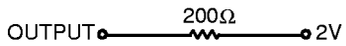

Switching Characteristics Over the Operating Range[6, 7]

Parameter	Description	7C419–10 7C421–10 7C425–10 7C429–10 7C433–10		7C419–15 7C421–15 7C425–15 7C429–15 7C433–15		7C420–20 7C421–20 7C424–20 7C425–20 7C428–20 7C429–20 7C433–20		7C420–25 7C421–25 7C424–25 7C425–25 7C429–25 7C432–25 7C433–25		Unit
		Min.	Max.	Min.	Max.	Min.	Max.	Min.	Max.	
t_{RC}	Read Cycle Time	20		25		30		35		ns
t_A	Access Time		10		15		20		25	ns
t_{RR}	Read Recovery Time	10		10		10		10		ns
t_{PR}	Read Pulse Width	10		15		20		25		ns
t_{LZR}[5,8]	Read LOW to Low Z	3		3		3		3		ns
t_{DVR}[8,9]	Data Valid After Read HIGH	5		5		5		5		ns
t_{HZR}[5,8,9]	Read HIGH to High Z		15		15		15		18	ns
t_{WC}	Write Cycle Time	20		25		30		35		ns
t_{PW}	Write Pulse Width	10		15		20		25		ns
t_{HWZ}[5,8]	Write HIGH to Low Z	5		5		5		5		ns
t_{WR}	Write Recovery Time	10		10		10		10		ns
t_{SD}	Data Set-Up Time	6		8		12		15		ns
t_{HD}	Data Hold Time	0		0		0		0		ns
t_{MRSC}	$\overline{MR}$ Cycle Time	20		25		30		35		ns
t_{PMR}	$\overline{MR}$ Pulse Width	10		15		20		25		ns
t_{RMR}	$\overline{MR}$ Recovery Time	10		10		10		10		ns
t_{RPW}	Read HIGH to $\overline{MR}$ HIGH	10		15		20		25		ns
t_{WPW}	Write HIGH to $\overline{MR}$ HIGH	10		15		20		25		ns
t_{RTC}	Retransmit Cycle Time	20		25		30		35		ns
t_{PRT}	Retransmit Pulse Width	10		15		20		25		ns
t_{RTR}	Retransmit Recovery Time	10		10		10		10		ns

Notes:

6. Test conditions assume signal transition time of 3 ns or less, timing reference levels of 1.5V and output loading of the specified I_{OL}/I_{OH} and 30 pF load capacitance, as in part (a) of AC Test Load and Waveforms, unless otherwise specified.
7. See the last page of this specification for Group A subgroup testing information.
8. t_{HZR} transition is measured at +200 mV from V_{OL} and –200 mV from V_{OH}. t_{DVR} transition is measured at the 1.5V level. t_{HWZ} and t_{LZR} transition is measured at ±100 mV from the steady state.
9. t_{HZR} and t_{DVR} use capacitance loading as in part (b) of AC Test Load and Waveforms.

Switching Characteristics Over the Operating Range[6, 7] (continued)

Parameter	Description	7C419–10 7C421–10 7C425–10 7C429–10 7C433–10		7C419–15 7C421–15 7C425–15 7C429–15 7C433–15		7C420–20 7C421–20 7C424–20 7C425–20 7C428–20 7C429–20 7C433–20		7C420–25 7C421–25 7C424–25 7C425–25 7C429–25 7C432–25 7C433–25		Unit
		Min.	Max.	Min.	Max.	Min.	Max.	Min.	Max.	
t_{EFL}	$\overline{MR}$ to $\overline{EF}$ LOW		20		25		30		35	ns
t_{HFH}	$\overline{MR}$ to $\overline{HF}$ HIGH		20		25		30		35	ns
t_{FFH}	$\overline{MR}$ to $\overline{FF}$ HIGH		20		25		30		35	ns
t_{REF}	Read LOW to $\overline{EF}$ LOW		10		15		20		25	ns
t_{RFF}	Read HIGH to $\overline{FF}$ HIGH		10		15		20		25	ns
t_{WEF}	Write HIGH to $\overline{EF}$ HIGH		10		15		20		25	ns
t_{WFF}	Write LOW to $\overline{FF}$ LOW		10		15		20		25	ns
t_{WHF}	Write LOW to $\overline{HF}$ LOW		10		15		20		25	ns
t_{RHF}	Read HIGH to $\overline{HF}$ HIGH		10		15		20		25	ns
t_{RAE}	Effective Read from Write HIGH		10		15		20		25	ns
t_{RPE}	Effective Read Pulse Width After $\overline{EF}$ HIGH	10		15		20		25		ns
t_{WAF}	Effective Write from Read HIGH		10		15		20		25	ns
t_{WPF}	Effective Write Pulse Width After $\overline{FF}$ HIGH	10		15		20		25		ns
t_{XOL}	Expansion Out LOW Delay from Clock		10		15		20		25	ns
t_{XOH}	Expansion Out HIGH Delay from Clock		10		15		20		25	ns

Switching Characteristics Over the Operating Range[6, 7] (continued)

Parameter	Description	7C419–30 7C421–30 7C424–30 7C425–30 7C429–30 7C433–30		7C419–40 7C420–40 7C421–40 7C424–40 7C425–40 7C429–40 7C432–40 7C433–40		7C420–65 7C421–65 7C424–65 7C425–65 7C428–65 7C429–65 7C433–65		Unit
		Min.	Max.	Min.	Max.	Min.	Max.	
t_{RC}	Read Cycle Time	40		50		80		ns
t_A	Access Time		30		40		65	ns
t_{RR}	Read Recovery Time	10		10		15		ns
t_{PR}	Read Pulse Width	30		40		65		ns
t_{LZR}[5,8]	Read LOW to Low Z	3		3		3		ns
t_{DVR}[8,9]	Data Valid After Read HIGH	5		5		5		ns
t_{HZR}[5,8,9]	Read HIGH to High Z		20		20		20	ns
t_{WC}	Write Cycle Time	40		50		80		ns
t_{PW}	Write Pulse Width	30		40		65		ns
t_{HWZ}[5,8]	Write HIGH to Low Z	5		5		5		ns
t_{WR}	Write Recovery Time	10		10		15		ns
t_{SD}	Data Set-Up Time	18		20		30		ns
t_{HD}	Data Hold Time	0		0		0		ns
t_{MRSC}	$\overline{MR}$ Cycle Time	40		50		80		ns
t_{PMR}	$\overline{MR}$ Pulse Width	30		40		65		ns
t_{RMR}	$\overline{MR}$ Recovery Time	10		10		15		ns
t_{RPW}	Read HIGH to $\overline{MR}$ HIGH	30		40		65		ns
t_{WPW}	Write HIGH to $\overline{MR}$ HIGH	30		40		65		ns
t_{RTC}	Retransmit Cycle Time	40		50		80		ns
t_{PRT}	Retransmit Pulse Width	30		40		65		ns
t_{RTR}	Retransmit Recovery Time	10		10		15		ns
t_{EFL}	$\overline{MR}$ to $\overline{EF}$ LOW		40		50		80	ns
t_{HFH}	$\overline{MR}$ to $\overline{HF}$ HIGH		40		50		80	ns
t_{FFH}	$\overline{MR}$ to $\overline{FF}$ HIGH		40		50		80	ns
t_{REF}	Read LOW to $\overline{EF}$ LOW		30		35		60	ns
t_{RFF}	Read HIGH to $\overline{FF}$ HIGH		30		35		60	ns
t_{WEF}	Write HIGH to $\overline{EF}$ HIGH		30		35		60	ns
t_{WFF}	Write LOW to $\overline{FF}$ LOW		30		35		60	ns
t_{WHF}	Write LOW to $\overline{HF}$ LOW		30		35		60	ns
t_{RHF}	Read HIGH to $\overline{HF}$ HIGH		30		35		60	ns
t_{RAE}	Effective Read from Write HIGH		30		35		60	ns
t_{RPE}	Effective Read Pulse Width After $\overline{EF}$ HIGH	30		40		65		ns
t_{WAF}	Effective Write from Read HIGH		30		35		60	ns
t_{WPF}	Effective Write Pulse Width After $\overline{FF}$ HIGH	30		40		65		ns
t_{XOL}	Expansion Out LOW Delay from Clock		30		40		65	ns
t_{XOH}	Expansion Out HIGH Delay from Clock		30		40		65	ns

Switching Waveforms

Asynchronous Read and Write

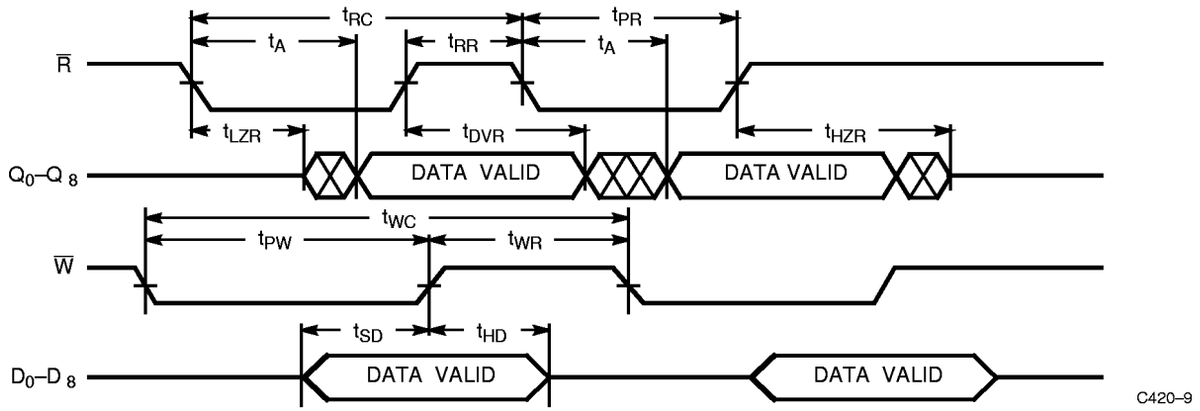

Master Reset

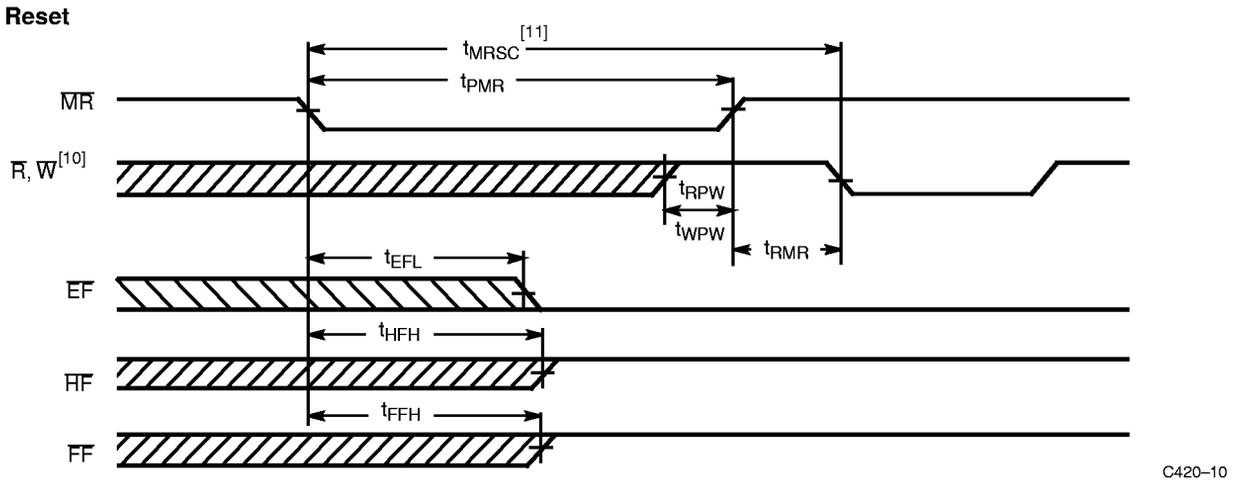

Half-Full Flag

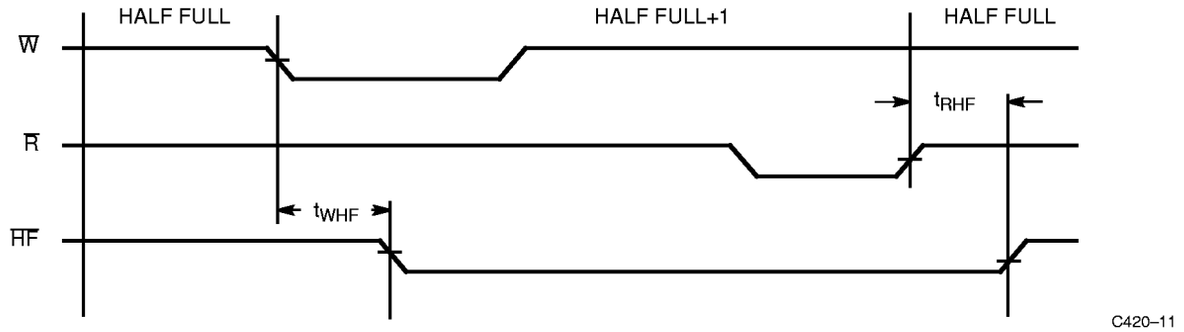

Notes:

10. $\overline{W}$ and $\overline{R} \geq V_{IH}$ around the rising edge of $\overline{MR}$.
11. $t_{MRSC} = t_{PMR} + t_{RMR}$.

Switching Waveforms (continued)

Last Write to First Read Full Flag

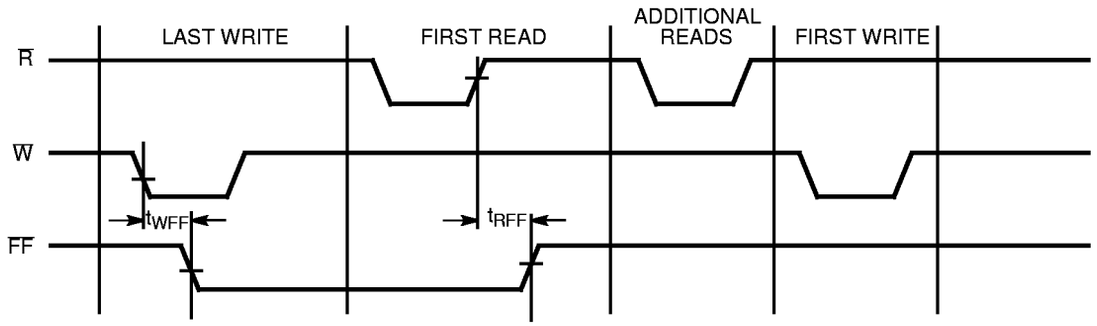

C420–12

Last Read to First Write Empty Flag

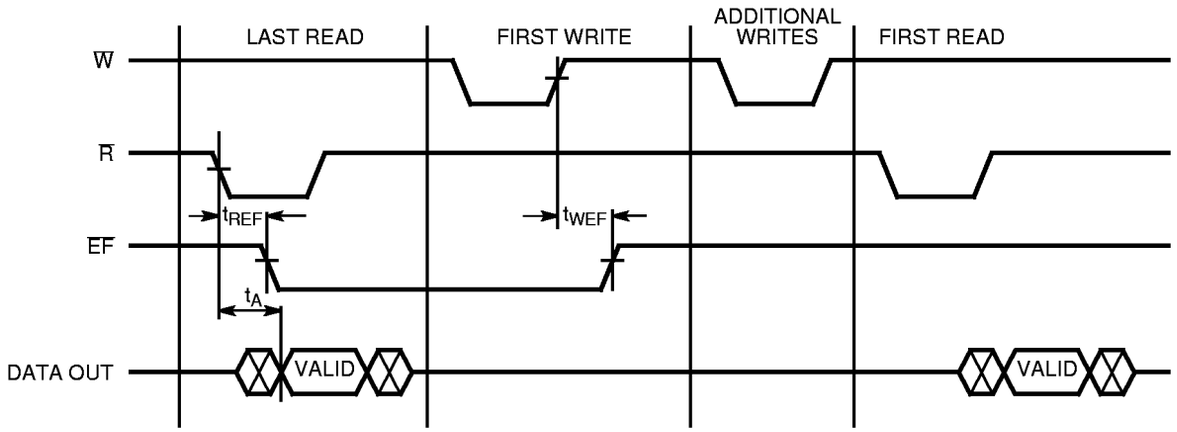

C420–13

Retransmit[12]

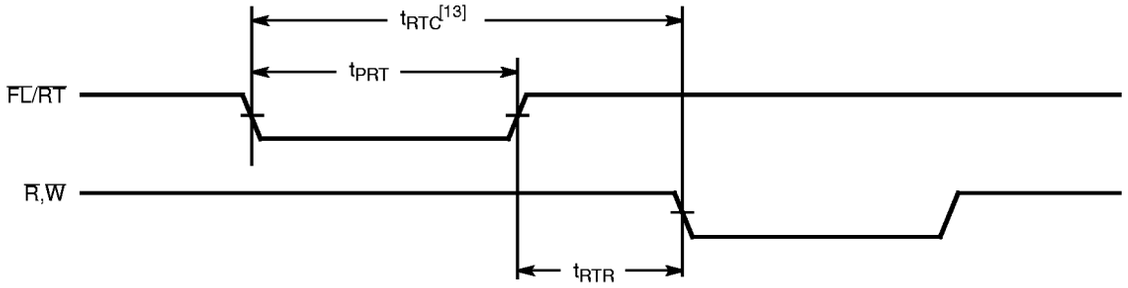

C420–14

Notes:

12. EF, HF and FF may change state during retransmit as a result of the offset of the read and write pointers, but flags will be valid at t_{RTC}.
13. $t_{RTC} = t_{PRT} + t_{RTR}$.

Switching Waveforms (continued)

Empty Flag and Read Data Flow-Through Mode

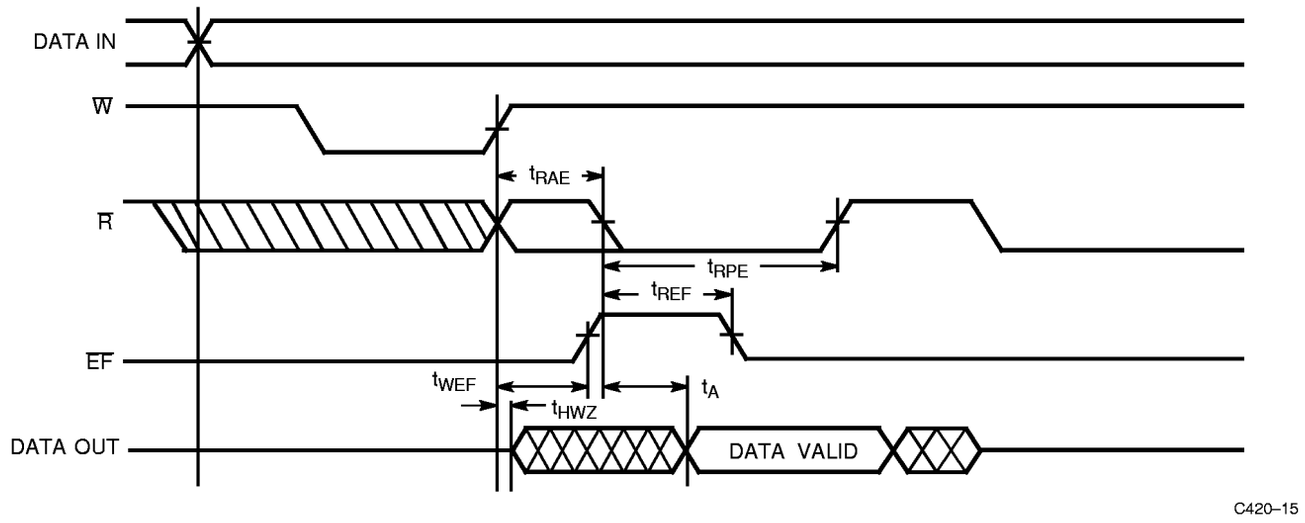

Full Flag and Write Data Flow-Through Mode

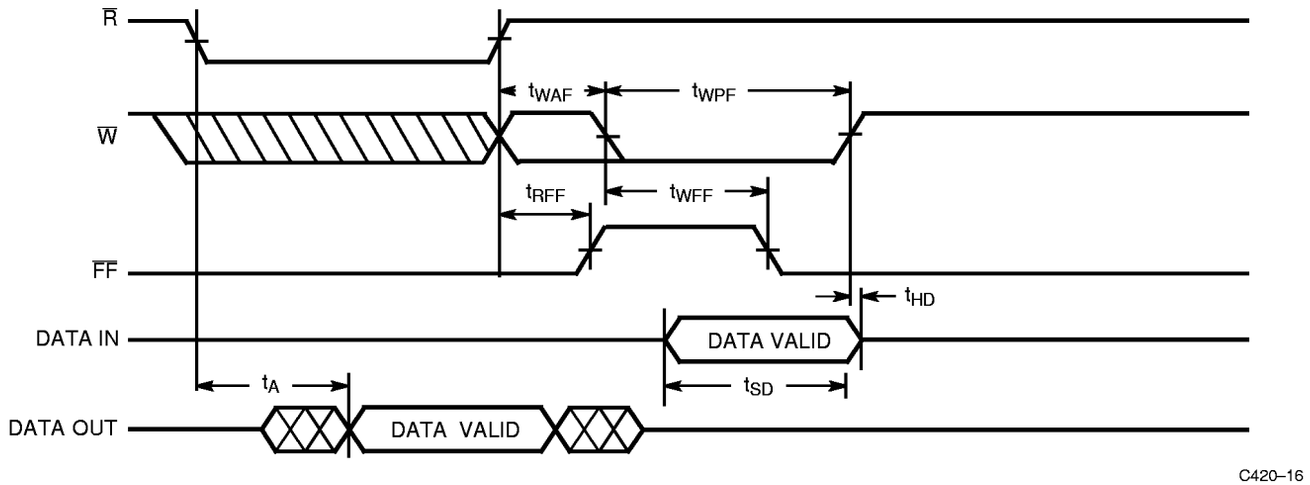

Switching Waveforms (continued)

Expansion Timing Diagrams

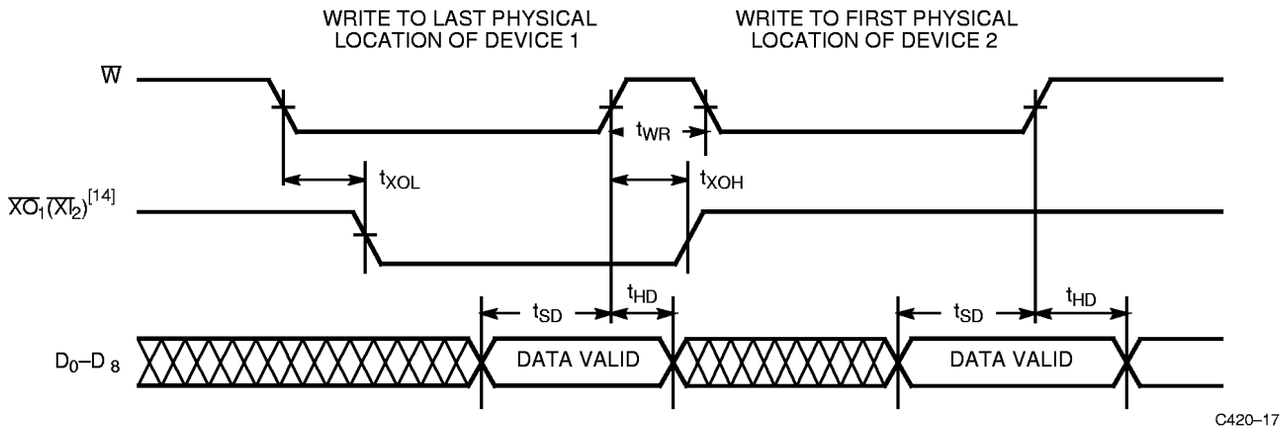

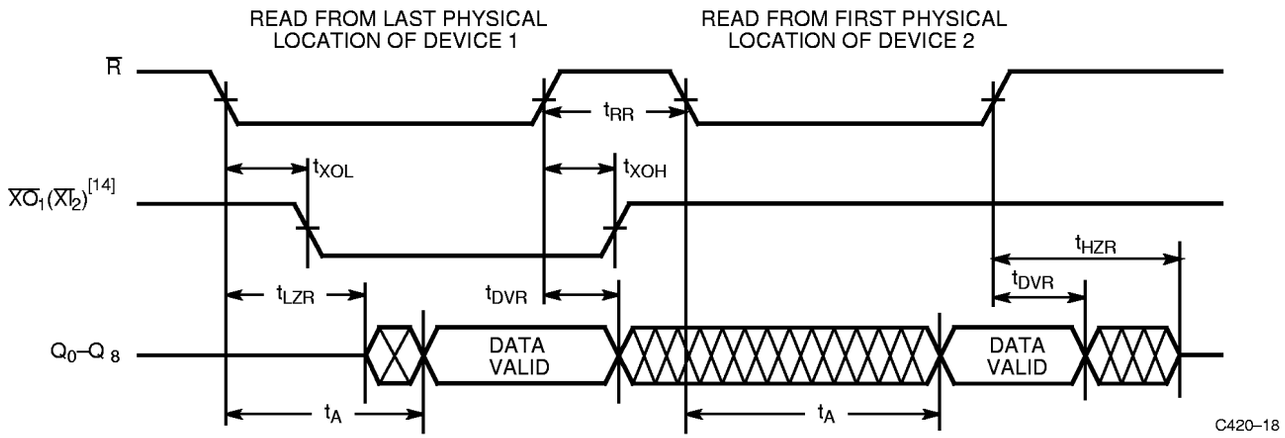

Note:
14. Expansion Out of device 1 ($\overline{XO}_1$) is connected to Expansion In of device 2 ($\overline{XI}_2$).

Architecture

The CY7C419, CY7C420/1, CY7C424/5, CY7C428/9, CY7C432/3 FIFOs consist of an array of 256, 512, 1024, 2048, 4096 words of 9 bits each (implemented by an array of dual-port RAM cells), a read pointer, a write pointer, control signals ($\overline{W}$, $\overline{R}$, $\overline{XI}$, $\overline{XO}$, $\overline{FL}$, $\overline{RT}$, $\overline{MR}$), and Full, Half Full, and Empty flags.

Dual-Port RAM

The dual-port RAM architecture refers to the basic memory cell used in the RAM. The cell itself enables the read and write operations to be independent of each other, which is necessary to achieve truly asynchronous operation of the inputs and outputs. A second benefit is that the time required to increment the read and write pointers is much less than the time that would be required for data propagation through the memory, which would be the case if the memory were implemented using the conventional register array architecture.

Resetting the FIFO

Upon power-up, the FIFO must be reset with a Master Reset ($\overline{MR}$) cycle. This causes the FIFO to enter the empty condition signified by the Empty flag ($\overline{EF}$) being LOW, and both the Half Full ($\overline{HF}$) and Full flags ($\overline{FF}$) being HIGH. Read ($\overline{R}$) and write ($\overline{W}$) must be HIGH t_{RPW}/t_{WPW} before and t_{RMR} after the rising edge of $\overline{MR}$ for a valid reset cycle. If reading from the FIFO after a reset cycle is attempted, the outputs will all be in the high-impedance state.

Writing Data to the FIFO

The availability of at least one empty location is indicated by a HIGH $\overline{FF}$. The falling edge of $\overline{W}$ initiates a write cycle. Data appearing at the inputs (D_0–D_8) t_{SD} before and t_{HD} after the rising edge of $\overline{W}$ will be stored sequentially in the FIFO.

The $\overline{EF}$ LOW-to-HIGH transition occurs t_{WEF} after the first LOW-to-HIGH transition of $\overline{W}$ for an empty FIFO. $\overline{HF}$ goes LOW t_{WHF} after the falling edge of $\overline{W}$ following the FIFO actually being Half Full. Therefore, the $\overline{HF}$ is active once the FIFO is filled to half its capacity plus one word. $\overline{HF}$ will remain LOW while less than one half of total memory is available for writing. The LOW-to-HIGH transition of $\overline{HF}$ occurs t_{RHF} after the rising edge of $\overline{R}$ when the FIFO goes from half full +1 to half full. $\overline{HF}$ is available in standalone and width expansion modes. $\overline{FF}$ goes LOW t_{WFF} after the falling edge of $\overline{W}$, during the cycle in which the last available location is filled. Internal logic prevents overrunning a full FIFO. Writes to a full FIFO are ignored and the write pointer is not incremented. $\overline{FF}$ goes HIGH tRFF after a read from a full FIFO.

Reading Data from the FIFO

The falling edge of $\overline{R}$ initiates a read cycle if the $\overline{EF}$ is not LOW. Data outputs (Q_0–Q_8) are in a high-impedance condition between read operations ($\overline{R}$ HIGH), when the FIFO is empty, or when the FIFO is not the active device in the depth expansion mode.

When one word is in the FIFO, the falling edge of $\overline{R}$ initiates a HIGH-to-LOW transition of $\overline{EF}$. The rising edge of $\overline{R}$ causes the data outputs to go to the high-impedance state and remain such until a write is performed. Reads to an empty FIFO are ignored and do not increment the read pointer. From the empty condition, the FIFO can be read t_{WEF} after a valid write.

The retransmit feature is beneficial when transferring packets of data. It enables the receipt of data to be acknowledged by the receiver and retransmitted if necessary.

The Retransmit ($\overline{RT}$) input is active in the standalone and width expansion modes. The retransmit feature is intended for use when a number of writes equal to or less than the depth of the FIFO have occurred since the last $\overline{MR}$ cycle. A LOW pulse on $\overline{RT}$ resets the internal read pointer to the first physical location of the FIFO. $\overline{R}$ and $\overline{W}$ must both be HIGH while and t_{RTR} after retransmit is LOW. With every read cycle after retransmit, previously accessed data as well as not previously accessed data is read and the read pointer is incremented until it is equal to the write pointer. Full, Half Full, and Empty flags are governed by the relative locations of the read and write pointers and are updated during a retransmit cycle. Data written to the FIFO after activation of $\overline{RT}$ are transmitted also.

Up to the full depth of the FIFO can be repeatedly retransmitted.

Standalone/Width Expansion Modes

Standalone and width expansion modes are set by grounding Expansion In ($\overline{XI}$) and tying First Load ($\overline{FL}$) to V_{CC}. FIFOs can be expanded in width to provide word widths greater than nine in increments of nine. During width expansion mode, all control line inputs are common to all devices, and flag outputs from any device can be monitored.

Depth Expansion Mode (see *Figure 1*)

Depth expansion mode is entered when, during a $\overline{MR}$ cycle, Expansion Out ($\overline{XO}$) of one device is connected to Expansion In ($\overline{XI}$) of the next device, with $\overline{XO}$ of the last device connected to $\overline{XI}$ of the first device. In the depth expansion mode the First Load ($\overline{FL}$) input, when grounded, indicates that this part is the first to be loaded. All other devices must have this pin HIGH. To enable the correct FIFO, $\overline{XO}$ is pulsed LOW when the last physical location of the previous FIFO is written to and pulsed LOW again when the last physical location is read. Only one FIFO is enabled for read and one for write at any given time. All other devices are in standby.

FIFOs can also be expanded simultaneously in depth and width. Consequently, any depth or width FIFO can be created of word widths in increments of 9. When expanding in depth, a composite $\overline{FF}$ must be created by ORing the $\overline{FF}$s together. Likewise, a composite $\overline{EF}$ is created by ORing the $\overline{EF}$s together. $\overline{HF}$ and $\overline{RT}$ functions are not available in depth expansion mode.

Use of the Empty and Full Flags

In order to achieve the maximum frequency, the flags must be valid at the beginning of the next cycle. However, because they can be updated by either edge of the read of write signal, they must be valid by one-half of a cycle. Cypress FIFOs meet this requirement; some competitors' FIFOs do not.

The reason why the flags are required to be valid by the next cycle is fairly complex. It has to do with the "effective pulse width violation" phenomenon, which can occur at the full and empty boundary conditions, if the flags are not properly used. The empty flag must be used to prevent reading from an empty FIFO and the full flag must be used to prevent writing into a full FIFO.

For example, consider an empty FIFO that is receiving read pulses. Because the FIFO is empty, the read pulses are ignored by the FIFO, and nothing happens. Next, a single word is written into the FIFO, with a signal that is asynchronous to the read signal. The (internal) state machine in the FIFO goes from empty to empty+1. However, it does this asynchronously with respect to the read signal, so that it cannot be determined what the effective pulse width of the read signal is, because the state machine does not look at the read signal until it goes to the empty+1 state. In a similar manner, the minimum write pulse width may be violated by attempting to write into a full FIFO, and asynchronously performing a read. The empty and full flags are used to avoid these effective pulse width violations, but in order to do this and operate at the maximum frequency, the flag must be valid at the beginning of the next cycle.

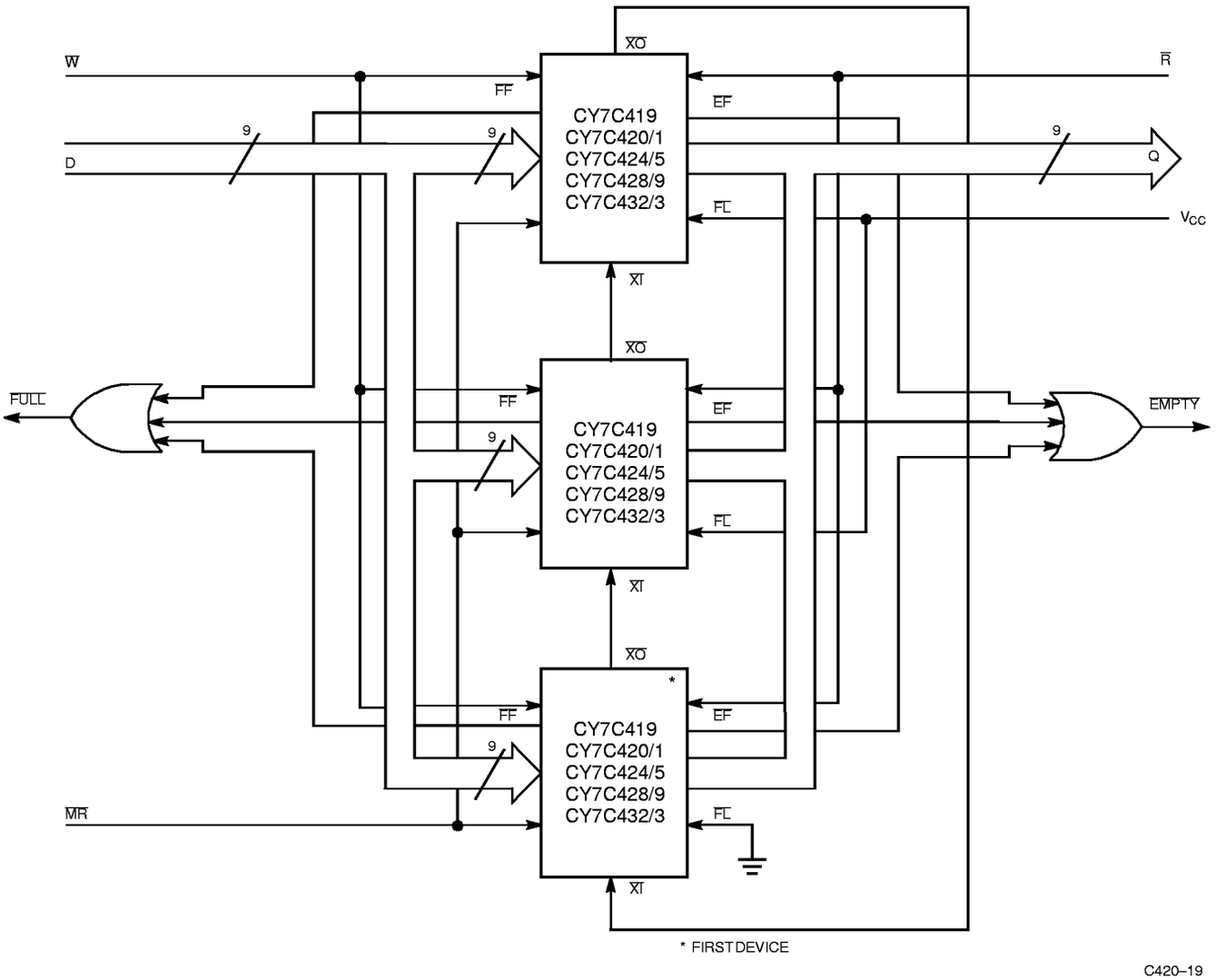

Figure 1. Depth Expansion

Ordering Information

Speed (ns)	Ordering Code	Package Type	Package Type	Operating Range
10	CY7C419–10AC	A32	32-Pin Thin Plastic Quad Flatpack	Commercial
	CY7C419–10JC	J65	32-Lead Plastic Leaded Chip Carrier	
	CY7C419–10PC	P21	28-Lead (300-Mil) Molded DIP	
	CY7C419–10VC	V21	28-Lead (300-Mil) Molded SOJ	
15	CY7C419–15AC	A32	32-Pin Thin Plastic Quad Flatpack	Commercial
	CY7C419–15JC	J65	32-Lead Plastic Leaded Chip Carrier	
	CY7C419–15VC	V21	28-Lead (300-Mil) Molded SOJ	
	CY7C419–15JI	J65	32-Lead Plastic Leaded Chip Carrier	Industrial
30	CY7C419–30JC	J65	32-Lead Plastic Leaded Chip Carrier	Commercial
40	CY7C419–40AC	A32	32-Pin Thin Plastic Quad Flatpack	Commercial
	CY7C419–40JC	J65	32-Lead Plastic Leaded Chip Carrier	

Ordering Information (continued)

Speed (ns)	Ordering Code	Package Type	Package Type	Operating Range
25	CY7C420–25PC	P15	28-Lead (600-Mil) Molded DIP	Commercial
40	CY7C420–40PC	P15	28-Lead (600-Mil) Molded DIP	Commercial
65	CY7C420–65PC	P15	28-Lead (600-Mil) Molded DIP	Commercial

Ordering Information (continued)

Speed (ns)	Ordering Code	Package Type	Package Type	Operating Range
10	CY7C421–10AC	A32	32-Pin Thin Plastic Quad Flatpack	Commercial
	CY7C421–10JC	J65	32-Lead Plastic Leaded Chip Carrier	
	CY7C421–10PC	P21	28-Lead (300-Mil) Molded DIP	
	CY7C421–10VC	V21	28-Lead (300-Mil) Molded SOJ	
15	CY7C421–15AC	A32	32-Pin Thin Plastic Quad Flatpack	Commercial
	CY7C421–15JC	J65	32-Lead Plastic Leaded Chip Carrier	
	CY7C421–15JI	J65	32-Lead Plastic Leaded Chip Carrier	Industrial
	CY7C421–15VI	V21	28-Lead (300-Mil) Molded SOJ	
	CY7C421–15DMB	D22	28-Lead (300-Mil) CerDIP	Military
	CY7C421–15LMB	L55	32-Pin Rectangular Leadless Chip Carrier	
20	CY7C421–20JC	J65	32-Lead Plastic Leaded Chip Carrier	Commercial
	CY7C421–20PC	P21	28-Lead (300-Mil) Molded DIP	
	CY7C421–20VC	V21	28-Lead (300-Mil) Molded SOJ	
	CY7C421–20JI	J65	32-Lead Plastic Leaded Chip Carrier	Industrial
25	CY7C421–25JC	J65	32-Lead Plastic Leaded Chip Carrier	Commercial
	CY7C421–25PC	P21	28-Lead (300-Mil) Molded DIP	
	CY7C421–25VC	V21	28-Lead (300-Mil) Molded SOJ	
	CY7C421–25JI	J65	32-Lead Plastic Leaded Chip Carrier	Industrial
	CY7C421–25PI	P21	28-Lead (300-Mil) Molded DIP	
	CY7C421–25DMB	D22	28-Lead (300-Mil) CerDIP	Military
30	CY7C421–30JC	J65	32-Lead Plastic Leaded Chip Carrier	Commercial
	CY7C421–30PC	P21	28-Lead (300-Mil) Molded DIP	

Ordering Information (continued)

Speed (ns)	Ordering Code	Package Type	Package Type	Operating Range
30	CY7C421–30JI	J65	32-Lead Plastic Leaded Chip Carrier	Industrial
	CY7C421–30DMB	D22	28-Lead (300-Mil) CerDIP	Military
	CY7C421–30LMB	L55	32-Pin Rectangular Leadless Chip Carrier	
40	CY7C421–40JC	J65	32-Lead Plastic Leaded Chip Carrier	Commercial
	CY7C421–40PC	P21	28-Lead (300-Mil) Molded DIP	
	CY7C421–40VC	V21	28-Lead (300-Mil) Molded SOJ	
	CY7C421–40JI	J65	32-Lead Plastic Leaded Chip Carrier	Industrial
65	CY7C421–65JC	J65	32-Lead Plastic Leaded Chip Carrier	Commercial
	CY7C421–65PC	P21	28-Lead (300-Mil) Molded DIP	
	CY7C421–65VC	V21	28-Lead (300-Mil) Molded SOJ	
	CY7C421–65JI	J65	32-Lead Plastic Leaded Chip Carrier	Industrial
	CY7C421–65DMB	D22	28-Lead (300-Mil) CerDIP	Military

Ordering Information (continued)

Speed (ns)	Ordering Code	Package Type	Package Type	Operating Range
40	CY7C424–40PC	P15	28-Lead (600-Mil) Molded DIP	Commercial
65	CY7C424–65PC	P15	28-Lead (600-Mil) Molded DIP	Commercial

Ordering Information (continued)

Speed (ns)	Ordering Code	Package Type	Package Type	Operating Range
10	CY7C425–10AC	A32	32-Pin Thin Plastic Quad Flatpack	Commercial
	CY7C425–10JC	J65	32-Lead Plastic Leaded Chip Carrier	
	CY7C425–10PC	P21	28-Lead (300-Mil) Molded DIP	
	CY7C425–10VC	V21	28-Lead (300-Mil) Molded SOJ	
15	CY7C425–15JC	J65	32-Lead Plastic Leaded Chip Carrier	Commercial
	CY7C425–15PC	P21	28-Lead (300-Mil) Molded DIP	
	CY7C425–15DMB	D22	28-Lead (300-Mil) CerDIP	Military
	CY7C425–15LMB	L55	32-Pin Rectangular Leadless Chip Carrier	
20	CY7C425–20JC	J65	32-Lead Plastic Leaded Chip Carrier	Commercial
	CY7C425–20PC	P21	28-Lead (300-Mil) Molded DIP	
	CY7C425–20VC	V21	28-Lead (300-Mil) Molded SOJ	
25	CY7C425–25JC	J65	32-Lead Plastic Leaded Chip Carrier	Commercial
	CY7C425–25PC	P21	28-Lead (300-Mil) Molded DIP	
	CY7C425–25JI	J65	32-Lead Plastic Leaded Chip Carrier	Industrial
	CY7C425–25VI	V21	28-Lead (300-Mil) Molded SOJ	
	CY7C425–25DMB	D22	28-Lead (300-Mil) CerDIP	Military
	CY7C425–25LMB	L55	32-Pin Rectangular Leadless Chip Carrier	
30	CY7C425–30JC	J65	32-Lead Plastic Leaded Chip Carrier	Commercial
	CY7C425–30PC	P21	28-Lead (300-Mil) Molded DIP	
	CY7C425–30VC	V21	28-Lead (300-Mil) Molded SOJ	
	CY7C425–30VI	V21	28-Lead (300-Mil) Molded SOJ	Industrial

Ordering Information (continued)

Speed (ns)	Ordering Code	Package Type	Package Type	Operating Range
40	CY7C425–40JC	J65	32-Lead Plastic Leaded Chip Carrier	Commercial
	CY7C425–40PC	P21	28-Lead (300-Mil) Molded DIP	
	CY7C425–40VC	V21	28-Lead (300-Mil) Molded SOJ	
	CY7C425–40JI	J65	32-Lead Plastic Leaded Chip Carrier	Industrial
65	CY7C425–65JC	J65	32-Lead Plastic Leaded Chip Carrier	Commercial
	CY7C425–65PC	P21	28-Lead (300-Mil) Molded DIP	

Ordering Information (continued)

Speed (ns)	Ordering Code	Package Type	Package Type	Operating Range
20	CY7C428–20PC	P15	28-Lead (600-Mil) Molded DIP	Commercial
25	CY7C428–25DMB	D16	28-Lead (600-Mil) CerDIP	Military
65	CY7C428–65PC	P15	28-Lead (600-Mil) Molded DIP	Commercial

Ordering Information (continued)

Speed (ns)	Ordering Code	Package Type	Package Type	Operating Range
10	CY7C429–10AC	A32	32-Pin Thin Plastic Quad Flatpack	Commercial
	CY7C429–10JC	J65	32-Lead Plastic Leaded Chip Carrier	
	CY7C429–10PC	P21	28-Lead (300-Mil) Molded DIP	
15	CY7C429–15JC	J65	32-Lead Plastic Leaded Chip Carrier	Commercial
	CY7C429–15JI	J65	32-Lead Plastic Leaded Chip Carrier	Industrial
	CY7C429–15DMB	D22	28-Lead (300-Mil) CerDIP	Military
	CY7C429–15LMB	L55	32-Pin Rectangular Leadless Chip Carrier	
20	CY7C429–20JC	J65	32-Lead Plastic Leaded Chip Carrier	Commercial
	CY7C429–20PC	P21	28-Lead (300-Mil) Molded DIP	
	CY7C429–20VC	V21	28-Lead (300-Mil) Molded SOJ	
	CY7C429–20DMB	D22	28-Lead (300-Mil) CerDIP	Military
25	CY7C429–25JC	J65	32-Lead Plastic Leaded Chip Carrier	Commercial
	CY7C429–25PC	P21	28-Lead (300-Mil) Molded DIP	
	CY7C429–25VC	V21	28-Lead (300-Mil) Molded SOJ	
	CY7C429–25JI	J65	32-Lead Plastic Leaded Chip Carrier	Industrial
	CY7C429–25DMB	D22	28-Lead (300-Mil) CerDIP	Military
	CY7C429–25LMB	L55	32-Pin Rectangular Leadless Chip Carrier	
30	CY7C429–30JC	J65	32-Lead Plastic Leaded Chip Carrier	Commercial
	CY7C429–30PC	P21	28-Lead (300-Mil) Molded DIP	
	CY7C429–30VC	V21	28-Lead (300-Mil) Molded SOJ	
	CY7C429–30DMB	D22	28-Lead (300-Mil) CerDIP	Military
40	CY7C429–40AC	A32	32-Pin Thin Plastic Quad Flatpack	Commercial
	CY7C429–40JC	J65	32-Lead Plastic Leaded Chip Carrier	
	CY7C429–40PC	P21	28-Lead (300-Mil) Molded DIP	
65	CY7C429–65JC	J65	32-Lead Plastic Leaded Chip Carrier	Commercial
	CY7C429–65PC	P21	28-Lead (300-Mil) Molded DIP	
	CY7C429–65JI	J65	32-Lead Plastic Leaded Chip Carrier	Industrial

Ordering Information (continued)

Speed (ns)	Ordering Code	Package Name	Package Type	Operating Range
25	CY7C432–25PC	P15	28-Lead (600-Mil) Molded DIP	Commercial
40	CY7C432–40PC	P15	28-Lead (600-Mil) Molded DIP	Commercial

Ordering Information (continued)

Speed (ns)	Ordering Code	Package Name	Package Type	Operating Range
10	CY7C433–10AC	A32	32-Pin Thin Plastic Quad Flatpack	Commercial
	CY7C433–10JC	J65	32-Lead Plastic Leaded Chip Carrier	
	CY7C433–10PC	P21	28-Lead (300-Mil) Molded DIP	
	CY7C433–10VC	V21	28-Lead (300-Mil) Molded SOJ	
15	CY7C433–15AC	A32	32-Pin Thin Plastic Quad Flatpack	Commercial
	CY7C433–15JC	J65	32-Lead Plastic Leaded Chip Carrier	
	CY7C433–15JI	J65	32-Lead Plastic Leaded Chip Carrier	Industrial
	CY7C433–15PI	P21	28-Lead (300-Mil) Molded DIP	
	CY7C433–15DMB	D22	28-Lead (300-Mil) CerDIP	Military
	CY7C433–15LMB	L55	32-Pin Rectangular Leadless Chip Carrier	
20	CY7C433–20AC	A32	32-Pin Thin Plastic Quad Flatpack	Commercial
	CY7C433–20JC	J65	32-Lead Plastic Leaded Chip Carrier	
	CY7C433–20PC	P21	28-Lead (300-Mil) Molded DIP	
25	CY7C433–25JC	J65	32-Lead Plastic Leaded Chip Carrier	Commercial
	CY7C433–25PC	P21	28-Lead (300-Mil) Molded DIP	
	CY7C433–25VC	V21	28-Lead (300-Mil) Molded SOJ	
	CY7C433–25JI	J65	32-Lead Plastic Leaded Chip Carrier	Industrial
30	CY7C433–30JC	J65	32-Lead Plastic Leaded Chip Carrier	Commercial
	CY7C433–30PC	P21	28-Lead (300-Mil) Molded DIP	
	CY7C433–30JI	J65	32-Lead Plastic Leaded Chip Carrier	Industrial
	CY7C433–30PI	P21	28-Lead (300-Mil) Molded DIP	
	CY7C433–30DMB	D22	28-Lead (300-Mil) CerDIP	Military
	CY7C433–30LMB	L55	32-Pin Rectangular Leadless Chip Carrier	
40	CY7C433–40JC	J65	32-Lead Plastic Leaded Chip Carrier	Commercial
	CY7C433–40PC	P21	28-Lead (300-Mil) Molded DIP	
	CY7C433–40VC	V21	28-Lead (300-Mil) Molded SOJ	
	CY7C433–40JI	J65	32-Lead Plastic Leaded Chip Carrier	Industrial
65	CY7C433–65JC	J65	32-Lead Plastic Leaded Chip Carrier	Commercial
	CY7C433–65PC	P21	28-Lead (300-Mil) Molded DIP	

MILITARY SPECIFICATIONS
Group A Subgroup Testing

DC Characteristics

Parameters	Subgroups
V_{OH}	1, 2, 3
V_{OL}	1, 2, 3
V_{IH}	1, 2, 3
V_{IL} Max.	1, 2, 3
I_{IX}	1, 2, 3
I_{CC}	1, 2, 3
I_{CC1}	1, 2, 3
I_{SB1}	1, 2, 3
I_{SB2}	1, 2, 3
I_{OS}	1, 2, 3

Switching Characteristics

Parameters	Subgroups
t_{RC}	9, 10, 11
t_{A}	9, 10, 11
t_{RR}	9, 10, 11
t_{PR}	9, 10, 11
t_{DVR}	9, 10, 11
t_{WC}	9, 10, 11
t_{PW}	9, 10, 11
t_{WR}	9, 10, 11
t_{SD}	9, 10, 11
t_{HD}	9, 10, 11
t_{MRSC}	9, 10, 11
t_{PMR}	9, 10, 11
t_{RMR}	9, 10, 11
t_{RPW}	9, 10, 11
t_{WPW}	9, 10, 11
t_{RTC}	9, 10, 11
t_{PRT}	9, 10, 11
t_{RTR}	9, 10, 11
t_{EFL}	9, 10, 11
t_{HFH}	9, 10, 11
t_{FFH}	9, 10, 11
t_{REF}	9, 10, 11
t_{RFF}	9, 10, 11
t_{WEF}	9, 10, 11
t_{WFF}	9, 10, 11
t_{WHF}	9, 10, 11
t_{RHF}	9, 10, 11
t_{RAE}	9, 10, 11
t_{RPE}	9, 10, 11
t_{WAF}	9, 10, 11
t_{WPF}	9, 10, 11
t_{XOL}	9, 10, 11
t_{XOH}	9, 10, 11

Document #: 38-00079-M

Package Diagrams

32-Lead Thin Plastic Quad Flat Pack A32

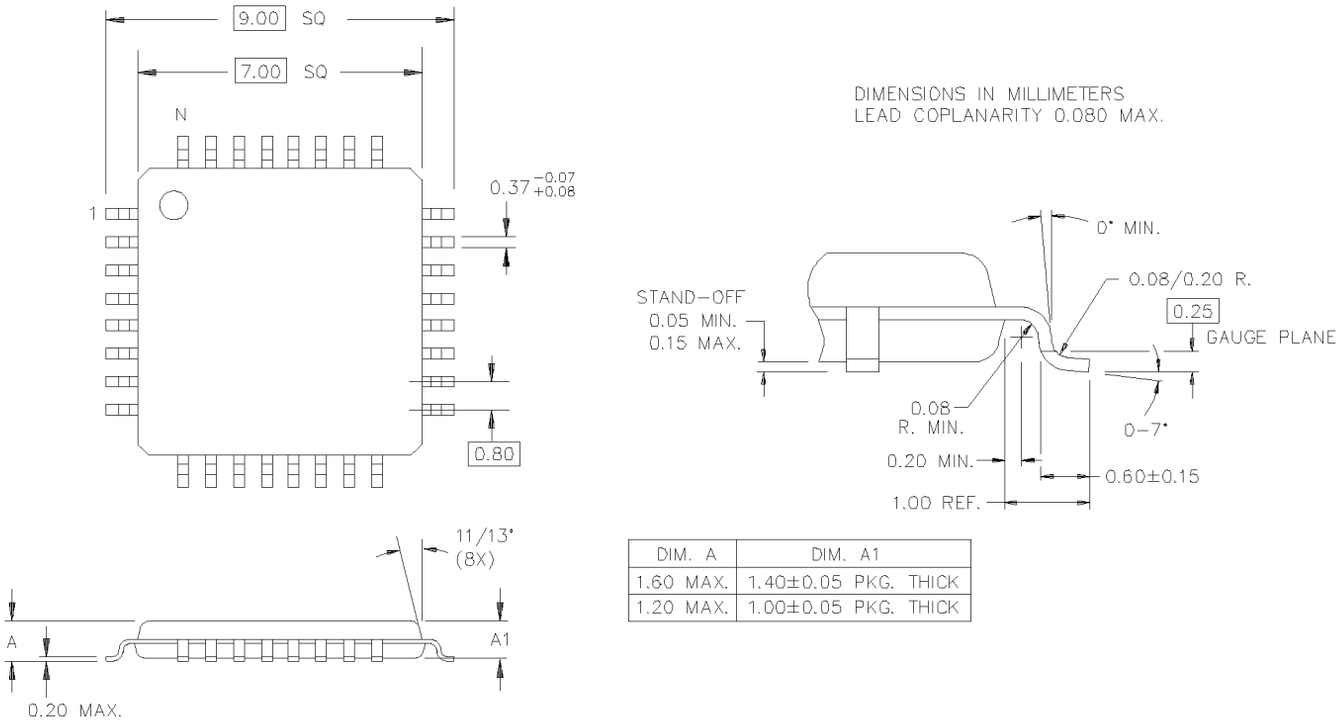

DIM. A	DIM. A1
1.60 MAX.	1.40±0.05 PKG. THICK
1.20 MAX.	1.00±0.05 PKG. THICK

28-Lead (600-Mil) CerDIP D16
MIL-STD-1835 D- 10Config.A

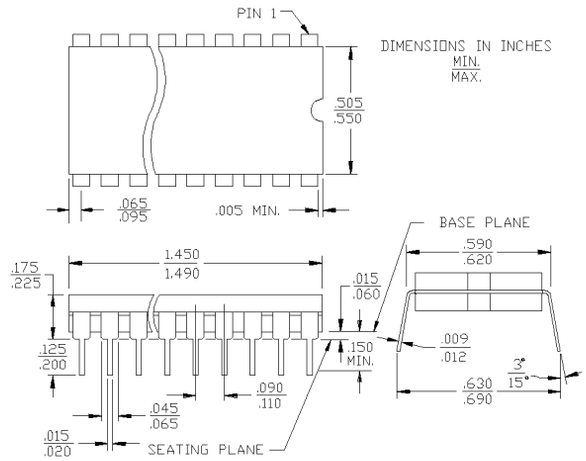

28-Lead (300-Mil) CerDIP D22
MIL-STD-1835 D- 15 Config.A

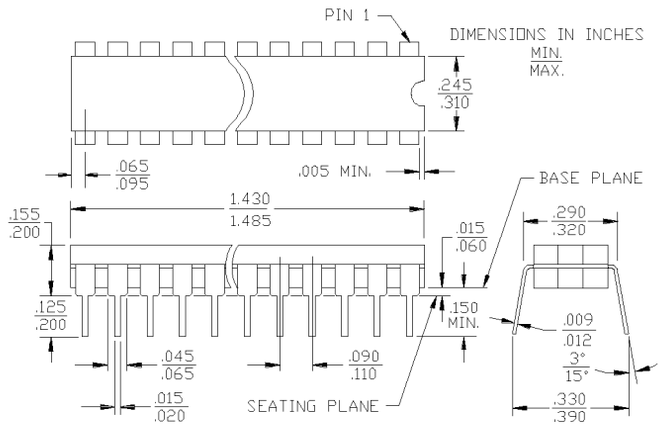

Package Diagrams (continued)

32-Lead Plastic Leaded Chip Carrier J65

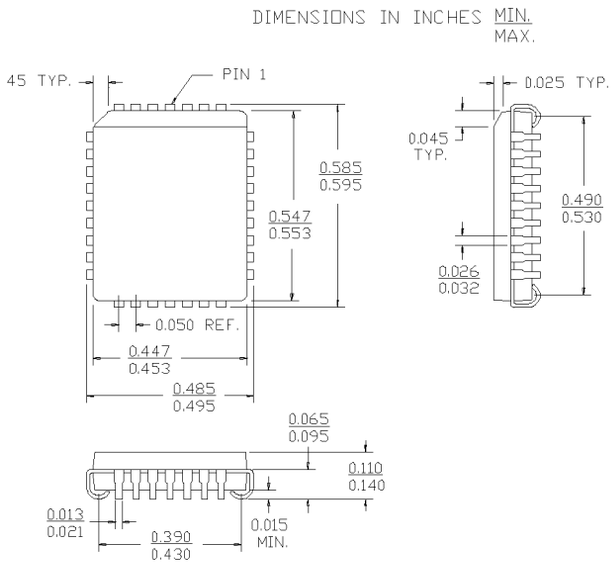

32-Pin Rectangular Leadless Chip Carrier L55
MIL-STD-1835 C-12

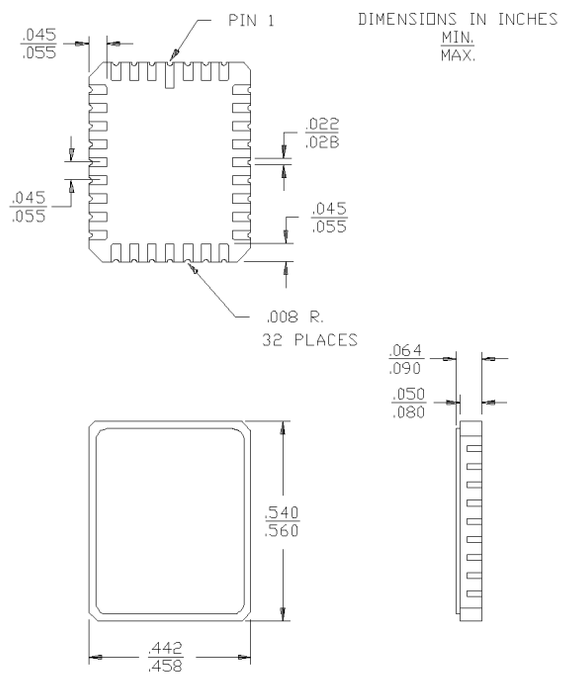

28-Lead (600-Mil) Molded DIP P15

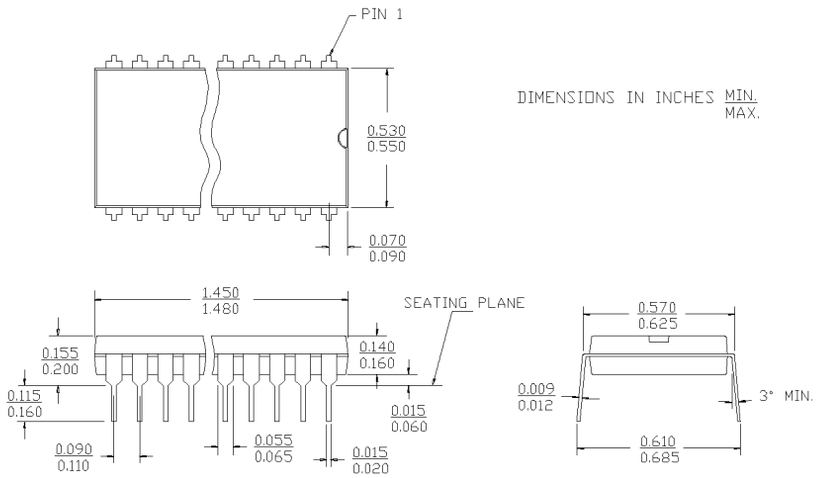

Package Diagrams (continued)

28-Lead (300-Mil) Molded DIP P21

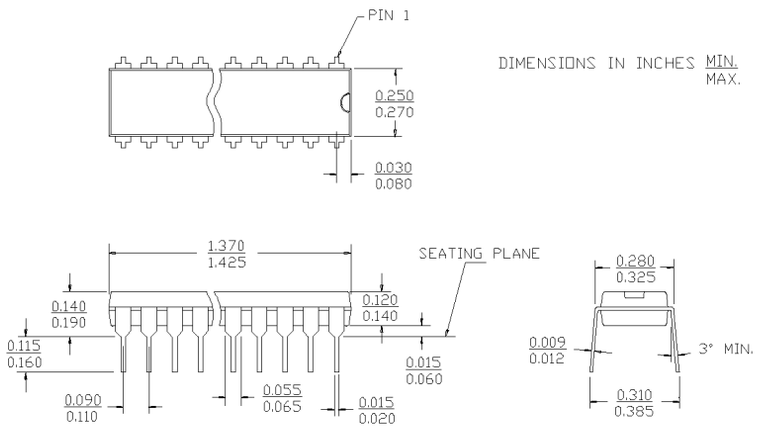

28-Lead (300-Mil) Molded SOJ V21

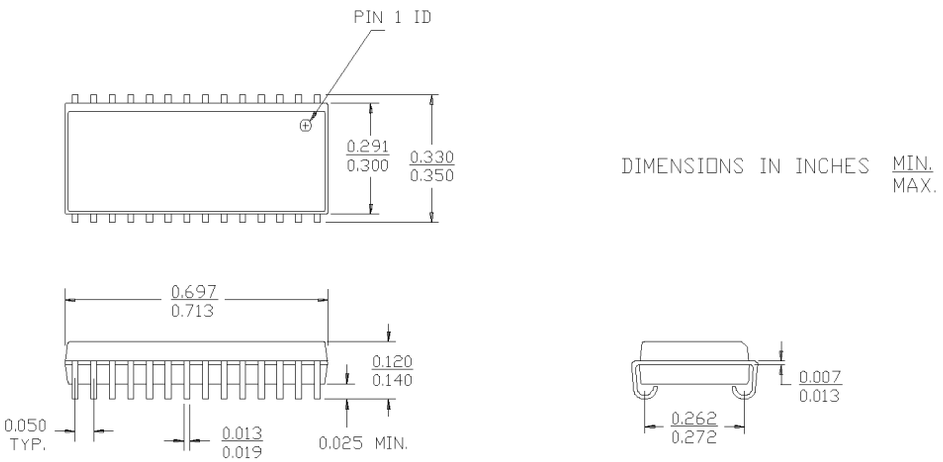

© Cypress Semiconductor Corporation, 1997. The information contained herein is subject to change without notice. Cypress Semiconductor Corporation assumes no responsibility for the use of any circuitry other than circuitry embodied in a Cypress Semiconductor product. Nor does it convey or imply any license under patent or other rights. Cypress Semiconductor does not authorize its products for use as critical components in life-support systems where a malfunction or failure may reasonably be expected to result in significant injury to the user. The inclusion of Cypress Semiconductor products in life-support systems application implies that the manufacturer assumes all risk of such use and in doing so indemnifies Cypress Semiconductor against all charges.