D2650, NOVEMBER 1982—REVISED DECEMBER 1990

- Low-Cost TV Color-Burst Crystal Sine-Wave Input Produces Highly Accurate and Stable Tones
- Device Powered Directly by Telephone or Small Batteries
- Keyboard or Electronic Input Capability
- Dual-Tone and Single-Tone Capability
- Minimal Standby Power Requirement
- Total Harmonic Distortion Meets EIA Standard RS-470
- PEP3 Processing Available
- Wide Supply-Voltage Range
- Minimal Parts Required
- Single-Tone Production Can be Inhibited
- Auxiliary Switching Outputs: One Bipolar Transistor and One CMOS Gate
- Designed to be Interchangeable with Mostek MK5087

N PACKAGE
(TOP VIEW)

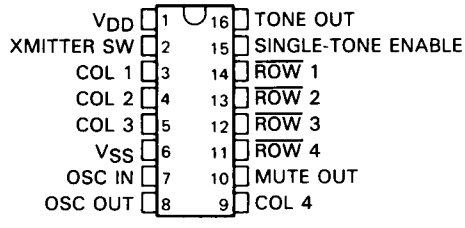

NOT RECOMMENDED FOR NEW DESIGN

Caution. These devices have limited built-in gate protection. The leads should be shorted together or the device placed in conductive foam during storage or handling to prevent electrostatic damage to the MOS gates.

description

The TCM5087 tone encoder is a CMOS integrated circuit designed specifically to generate the dial tones used in dual-tone telephone dialing systems. It requires a sine-wave input normally supplied by a low-cost TV color-burst crystal at 3.579545 MHz to generate eight different audio sinusoidal frequencies. With this input the encoder generates dial tones that are very low in total harmonic distortion and comply with standard Dual-Tone Multi-Frequency (DTMF) specifications without any need for frequency adjustment.

When generating a dual-tone signal, the encoder generates one column tone and one row tone and adds them for its output. The table below presents the frequencies produced by the tone encoder with the 3.579545-MHz TV-crystal signal input. Any deviation in this frequency will be reflected in the frequency output. The tolerance of the crystal is normally 0.02%.

TONE	DTMF STANDARD (Hz)	ENCODER OUTPUT* (Hz)	ERROR FROM STANDARD* (%)
Row 1	697	701.3	+0.62
Row 2	770	771.4	+0.19
Row 3	852	857.2	+0.61
Row 4	941	935.1	−0.63
Column 1	1209	1215.9	+0.57
Column 2	1336	1331.7	−0.32
Column 3	1477	1471.9	−0.35
Column 4	1633	1645	+0.73

*Using an input signal from a 3.579545-MHz crystal.

PRODUCTION DATA documents contain information current as of publication date. Products conform to specifications per the terms of Texas Instruments standard warranty. Production processing does not necessarily include testing of all parameters.

Copyright © 1990, Texas Instruments Incorporated

operation

keyboard and electronic inputs

The specific tone or tones generated are determined by inputs designated $\overline{\text{ROW}}$ 1 through $\overline{\text{ROW}}$ 4 and COLUMN 1 through COLUMN 4. The inputs are normally received from a 2-of-8 DTMF (DPST) keyboard, a Class A (SPST) keyboard, or an electronic circuit. Unlike dynamic or scanned inputs, the static inputs of the TCM5087 do not generate noise. See function table for input and output description.

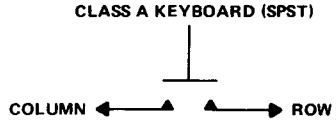

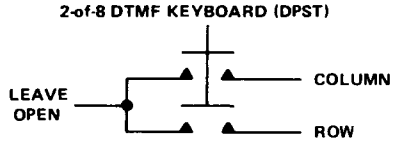

single-tone enable input

This input inhibits the generation of single tones when taken low. All other chip functions remain unchanged. If the input is high or left open, single-tone operation is enabled.

transmitter switch output

This output is at high impedance when one or more of the column inputs are active and is high when all column inputs are inactive. The output is the emitter of a bipolar transistor whose collector is at V_{DD}.

mute output

The mute output is high when one or more column inputs are active and is low when all column inputs are inactive.

functional block diagram

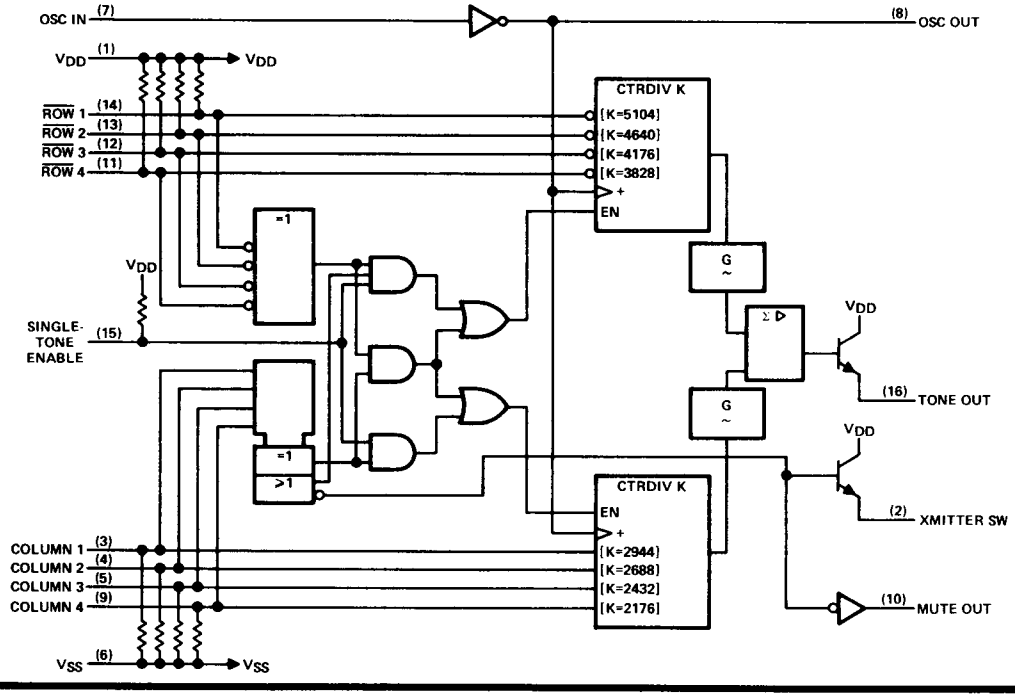

TONE ENCODER FUNCTION TABLE

INPUT COMBINATIONS†	TONE OUTPUT		MUTE OUTPUT	TRANSMITTER SWITCH OUTPUT
	PIN 15‡ OPEN	PIN 15‡ AT V_{SS}		
0 rows 0 columns	0	0	L	H
1 row 1 column	Row and column	Row and column	H	Hi-Z
2 or more rows 1 column	Column	0	H	Hi-Z
1 row 2 or more columns	Row	0	H	Hi-Z
2 or more rows 2 or more columns	0	0	H	Hi-Z
0 rows 1 column	Column	0	H	Hi-Z
0 rows 2 or more columns	0	0	H	Hi-Z
1 or more rows 0 columns	0	0	L	H

†Row inputs will be active (on) when the input voltage is at a low level (V_I # V_{IL}), and column inputs are active at a high input level. Under keyboard control, connecting a row input to a column input activates both.
‡Pin 15 is the single-tone disable input.

absolute maximum ratings over operating free-air temperature range (unless otherwise noted)

Supply voltage V_{DD} (see Note 1) . . . . . 13.5 V
Input voltage range . . . . . −0.3 V to V_{DD} + 0.3 V
Output voltage range . . . . . −0.3 V to V_{DD} + 0.3 V
Continuous power dissipation at 25°C free-air temperature (see Note 2) . . . . . 1150 mW
Operating free-air temperature range, T_A . . . . . −30°C to 70°C
Storage temperature range . . . . . −55°C to 150°C
Lead temperature 1,6 mm (1/16 inch) from case for 10 seconds . . . . . 260°C

NOTES: 1. All voltage values are with respect to the V_{SS} terminal.
2. For operation above 25°C free-air temperature, derate linearly to 736 mW at 70°C at the rate of 9.2 mW/°C.

recommended operating conditions

		MIN	NOM	MAX	UNIT
Supply voltage, V_{DD}		3.5		10	V
High-level input voltage, V_{IH}	Row inputs (off)	0.9 V_{DD}		V_{DD}	V
	All other inputs	0.7 V_{DD}		V_{DD}	
Low-level input voltage, V_{IL}	Column inputs (off)	V_{SS}		0.1 V_{DD}	V
	All other inputs	V_{SS}		0.3 V_{DD}	
Contact resistance between row and column inputs				100	Ω
Tone-output load resistance, R_L		120	330	620	Ω
Operating free-air temperature, T_A		−30		70	°C

electrical characteristics over operating free-air temperature range (unless otherwise noted)

PARAMETER			TEST CONDITIONS	MIN	TYP	MAX	UNIT
	Column or row input			10			kΩ
	Single-tone-enable input resistance to V_{DD}		T_A = 25°C	20		100	kΩ
V_{OH}	High-level output voltage	Mute output	V_{DD} = 3 V, I_{OH} = 0.2 mA,	2			V
			V_{DD} = 10 V, I_{OH} = 0.5 mA	9			
		Transmitter switch output	V_{DD} = 3.5 V, I_{OH} = −15 mA	1.5	2.5		
			V_{DD} = 10 V, I_{OH} = − 40 mA	8			
V_{OL}	Low-level output voltage, mute output		V_{DD} = 3 V, I_{OL} = −0.2 mA			0.5	V
			V_{DD} = 10 V, I_{OL} = −0.5 mA			0.5	
I_{OL}	Off-state current transmitter switch output		V_{DD} = 10 V, V_O = 0 V			10	μA
I_{DDstby}	Standby supply current with outputs unloaded		V_{DD} = 3.5 V		0.25	100	μA
			V_{DD} = 10 V		0.5	200	
I_{DDop}	Operating current		V_{DD} = 3.5 V, See Note 3		1	2	mA
			V_{DD} = 10 V, See Note 3		5	10	

operating characteristics over recommended ranges of operating free-air temperature and supply voltage (unless otherwise noted)

PARAMETER		TEST CONDITIONS†	MIN	TYP	MAX	UNIT
Output rms voltage	Row tone	R_L = 330 Ω, T_A = 25°C	317	400	500	mV
	Column tone		396	500	630	
Preemphasis (column tone to row tone)			1	2	3	dB
Dual-tone output distortion (see Note 4)		V_{DD} ≥ 4 V			−20	dB
Quiescent tone-output power					−80	dBm
Tone-output rise time (see Note 5)				3	5	ms

†Unless otherwise noted, test conditions are: R_L = 620 Ω for V_{DD} ≤ 5 V or R_L = 330 Ω for V_{DD} > 5 V. Crystal parameters are the following: f = 3.579545 MHz ±0.02%, R_S < 100 Ω, C_L = 18 pF, C_M = 0.02 pF, C_H = 5 pF, L_M = 96 mH.

NOTES: 3. Operating current is measured with all outputs unloaded, one row input connected to one column input, and normal oscillator input (T_A at 0°C to 70°C).
4. Distortion is expressed as the ratio of total out-of-band power relative to the total fundamental power for the dual tone.
5. This is the time required for output to change from its quiescent value to 90% of its final rms value.

output waveforms

Typical row and column stairstep approximations of sinusoidal outputs are shown in Figures 1 and 2. The row and column outputs are added together resulting in a typical dual-tone waveform as shown in Figure 3. Spectral analysis of this dual-tone waveform shows that all harmonic and intermodulation distortions are typically 30 dB below the strongest column-tone fundamental.

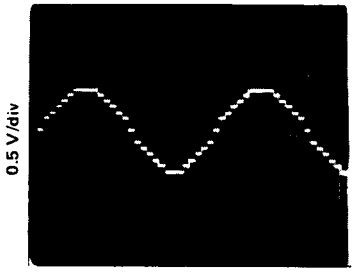

FIGURE 1

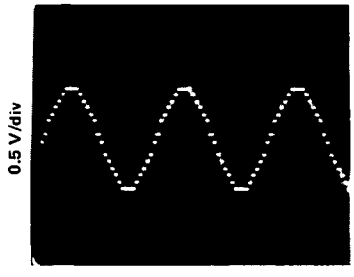

FIGURE 2

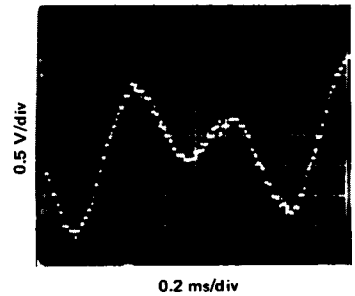

FIGURE 3

distortion considerations

The following formula is used to calculate the total harmonic distortion of a single row or a single column:

$$THD = \left(\frac{\sqrt{V_{2f}^2 + V_{3f}^2 + V_{4f}^2 + V_{5f}^2 + \ldots + V_{nf}^2}}{V_{1f}}\right) \times 100\%$$

where V_{2f} is the second harmonic of the fundamental frequency V_{1f} waveform and so on. The dual-tone total harmonic distortion is:

$$THD = \left(\frac{\sqrt{V_{2R}^2 + V_{3R}^2 + \ldots + V_{nR}^2 + V_{2C}^2 + \ldots V_{nC}^2 \pm V_{IMD}^2}}{\sqrt{V_{FR}^2 + V_{FC}^2}}\right) \times 100\%$$

where V_{FR} and V_{FC} are the row and column fundamental frequency waveforms, and V_{2R} and V_{2C}, etc., are the corresponding harmonics.

The total intermodulation distortion is:

$$V_{IMD}^2 = (V_{1R} + V_{1C})^2 + (V_{1R} - V_{1C})^2 + \ldots + (V_{nr} + V_{nC})^2 + (V_{nR} - V_{nC})^2$$

A relatively simple method of distortion measurement uses a spectrum analyzer to relate the harmonics to the fundamental frequency waveform. The tone encoder spectrum indicates the harmonics and intermodulation distortion at least 30 dB down relative to the column tone.

Another method for distortion measurement of the dual-tone waveform is to compare the total power in the fundamental frequencies with the total power in the various harmonics plus intermodulation on a signal analyzer. The encoders provide an output distortion of −20 dB maximum when operated between 3.5 V and 10 V. If operated between 3 V and 3.5 V, some clipping occurs at the output causing the distortion to exceed the −20 dB level.

APPLICATION INFORMATION

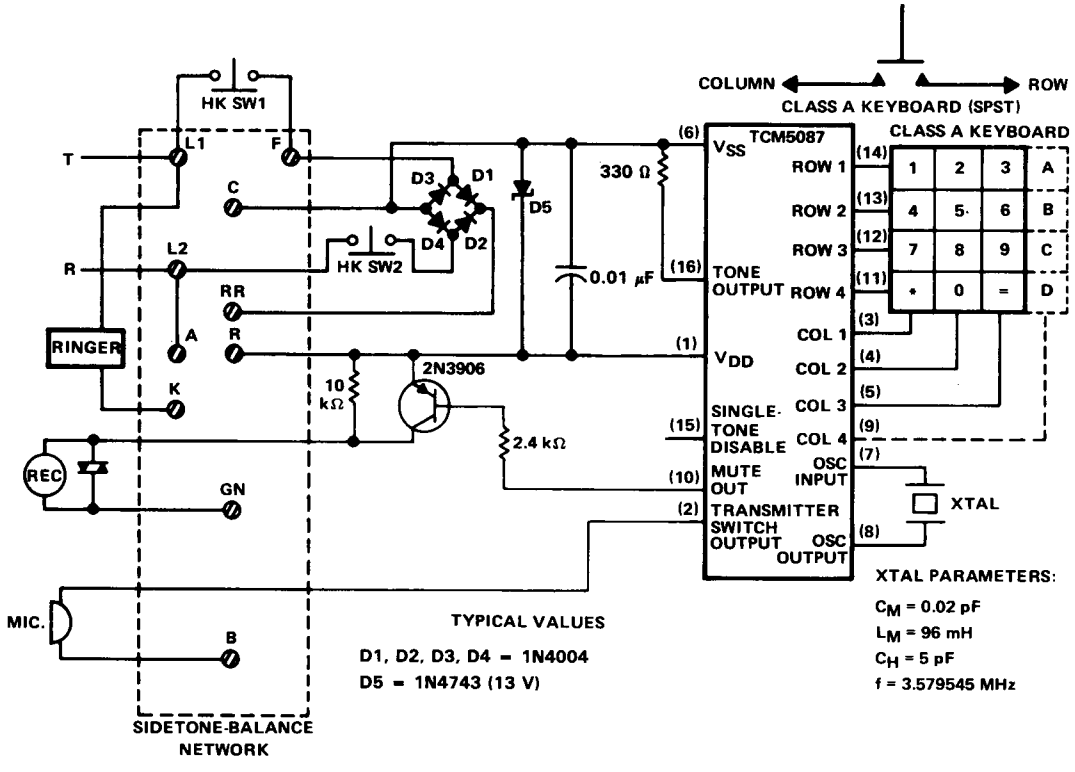

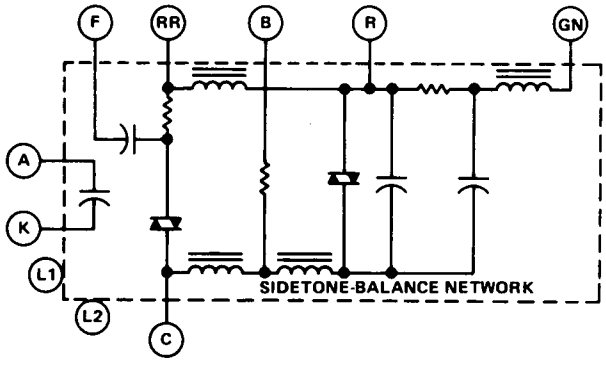

FIGURE 4. TYPICAL APPLICATION USING HYBRID COIL SIDETONE-BALANCE NETWORK, ELECTRONIC SWITCHING, AND LOW-COST (CLASS A) KEYBOARD