THIS DRAWING IS UNPUBLISHED. RELEASED FOR PUBLICATION -,- .
© COPYRIGHT - By - ALL RIGHTS RESERVED.

LOC	DIST
FT	0

REVISIONS

P	LTR	DESCRIPTION	DATE	DWN	APVD
	N5	REVISED PER ECO-12-0018036	12OCT12	KH	MB

	DIM B	CATALOG NUMBER	DIM A	NO OF POSN	PART NUMBER
	.160	4DB-P108-17	5.590	17	4-1437667-2
	.160	4DB-P108-16	5.265	16	4-1437667-0
	.160	4DB-P108-15	4.940	15	3-1437667-9
2 1	.160	4DB-P108-14-102	4.615	14	2-796658-5
2	.160	4DB-P108-14-102	4.615	14	2-796658-3
	.160	4DB-P108-14	4.615	14	3-1437667-8
	.160	4DB-P108-13	4.290	13	3-1437667-7
	.160	4DB-P108-12	3.965	12	3-1437667-6
	.160	4DB-P108-11	3.640	11	3-1437667-5
	.160	4DB-P108-10	3.315	10	3-1437667-3
5 2	.160	4DB-P106-09-094	2.990	9	1-796658-7
	.160	4DB-P108-09	2.990	9	3-1437667-2
6 1 OBSOLETE	.160	4DB-P108-08-091	2.665	8	~~1-796658-4~~
	.160	4DB-P108-08	2.665	8	3-1437667-1
5 3 2	.160	4DB-P106-07-100	2.340	7	2-796658-2
	.160	4DB-P106-07-093	2.340	7	1-796658-6
	.160	4DB-P108-07	2.340	7	3-1437667-0
5 3 2	.160	4DB-P106-06-099	2.015	6	2-796658-1
6 1 OBSOLETE	.160	4DB-P108-06-090	2.015	6	~~1-796658-3~~
5	.200	4DB-P108-06	2.015	6	2-796658-6
	.160	4DB-P108-06	2.015	6	2-1437667-9
5 3 2	.160	4DB-P106-05-098	1.690	5	2-796658-0
6 4 OBSOLETE	.160	4DB-P108-05-093	1.690	5	~~1-796658-5~~
	.160	4DB-P108-05	1.690	5	2-1437667-8
5 3 2	.160	4DB-P106-04-097	1.365	4	1-796658-9
1	.160	4DB-P108-04-089	1.365	4	1-796658-2
	.160	4DB-P108-04	1.365	4	2-1437667-6
5 3 2	.160	4DB-P106-03-096	1.040	3	1-796658-8
6 1	.160	4DB-P108-03-088	1.040	3	~~1-796658-1~~
	.160	4DB-P108-03	1.040	3	2-1437667-5
7 5	.142	4DB-P108-03-143	.715	2	2-796658-8
5	.142	4DB-P108-02-142	.715	2	2-796658-7
	.160	4DB-P108-02	.715	2	2-1437667-4

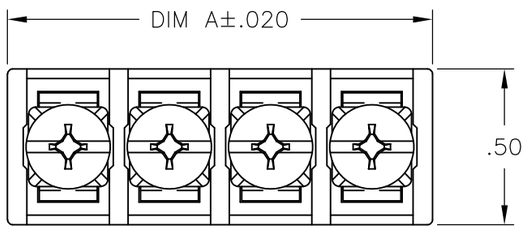

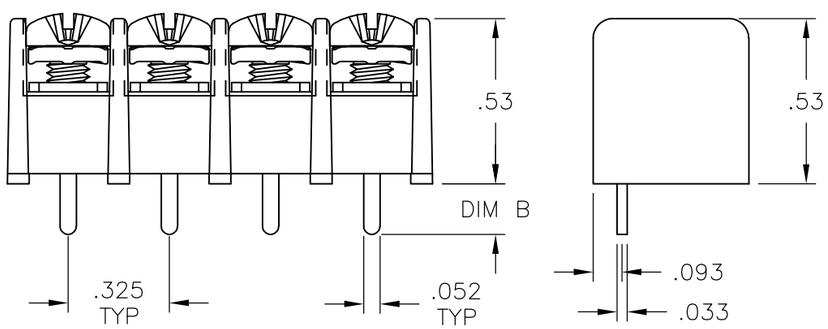

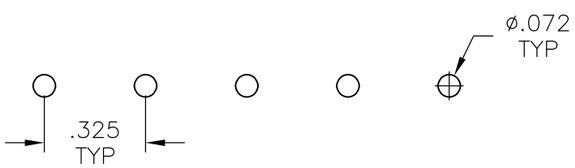

RECOMMENDED PCB LAYOUT

THIS DRAWING IS A CONTROLLED DOCUMENT.

DIMENSIONS: INCHES

TOLERANCES UNLESS OTHERWISE SPECIFIED:

0 PLC	± -
1 PLC	± -
2 PLC	± .01
3 PLC	± .005
4 PLC	± -
ANGLES	± 1°

MATERIAL -

FINISH -

DWN S WELDON 01MAY2003
CHK S YODER 5/1/03
APVD S YODER 5/1/03
PRODUCT SPEC —
APPLICATION SPEC —
WEIGHT —

TE Connectivity

NAME
ASSEMBLY, DUAL BARRIER
4DB-P108-XX
—

SIZE	CAGE CODE	DRAWING NO	RESTRICTED TO
A3	00779	C-2-1437667-4	—

CUSTOMER DRAWING | SCALE NTS | SHEET 1 OF 2 | REV N5

1470-19 (3/11)

THIS DRAWING IS UNPUBLISHED. RELEASED FOR PUBLICATION -,- .
© COPYRIGHT - By - ALL RIGHTS RESERVED.

LOC	DIST
FT	0

REVISIONS

P	LTR	DESCRIPTION	DATE	DWN	APVD
	-	SEE SHEET 1	-	-	-

MATERIAL:
HOUSING: THERMOPLASTIC PA, UL94V-0, BLACK.
TERIMINAL: BRIGHT TIN PLATED, COPPER ALLOY.
SCREW: 6-32, STEEL, ZINC PLATED CLEAR CHROMATE.

ELECTRICAL:
UL CLASS C: 20A, 150V.
UL CLASS D: 10A, 300V.
CSA TYPE B: 20A, 300V.
CSA TYPE C: 20A, 300V.
CSA TYPE D: 10A, 300V.
CSA TYPE E: 20A, 300V.
WIRE RANGE: 12-22 AWG

MECHANICAL:
MAXIMUM TORQUE RATING: 7 IN-LBS.
RUNNING TORQUE: 0.5-3.5 IN-LBS UNLESS OTHERWISE STATED.

1. SCREWS ARE BOTTOMED, NO THREAD INTERRUPT.
2. SCREWS ARE NICKEL PLATED BRASS.
3. SCREWS ARE CAPTIVE.
4. SEE FIGURE.
5. PRELIMINARY PART NUMBER.
6. OBSOLETE PARTS: OBSOLETE CIS STREAMLINING PER D.RENAUD/D.SINISI
7. TERMINAL FINISH: MATTE TIN

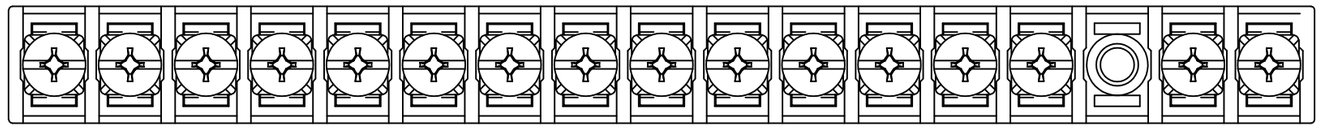

2-796658-4

DIM B	CATALOG NUMBER	DIM A	NO OF POSN	PART NUMBER
.160	4DB-P108-30	9.815	30	5-1437667-5
.160	4DB-P108-29	9.490	29	796658-9
.160	4DB-P108-28	9.165	28	5-1437667-3
.160	4DB-P108-27	8.840	27	796658-8
.160	4DB-P108-26	8.515	26	5-1437667-2
.160	4DB-P108-25	8.190	25	796658-7
.160	4DB-P108-24	7.865	24	5-1437667-0
.160	4DB-P108-23	7.540	23	796658-6
.160	4DB-P108-22	7.215	22	4-1437667-8
.160	4DB-P108-21	6.890	21	796658-2
.160	4DB-P108-20	6.565	20	4-1437667-6
.160	4DB-P108-19	6.240	19	4-1437667-5
.160	4DB-P108-18	5.915	18	4-1437667-4
5 4 .160	4DB-P108-16-105	5.590	17	2-796628-4

THIS DRAWING IS A CONTROLLED DOCUMENT.

DIMENSIONS: INCHES

TOLERANCES UNLESS OTHERWISE SPECIFIED:
0 PLC ± -
1 PLC ± -
2 PLC ± .01
3 PLC ± .005
4 PLC ± -
ANGLES ± 1°

MATERIAL -
FINISH -

DWN S WELDON 01MAY2003
CHK S YODER 5/1/03
APVD S YODER 5/1/03
PRODUCT SPEC -
APPLICATION SPEC -
WEIGHT -

TE Connectivity

NAME
ASSEMBLY, DUAL BARRIER
4DB-P108-XX
-

SIZE	CAGE CODE	DRAWING NO	RESTRICTED TO
A3	00779	C-2-1437667-4	-

CUSTOMER DRAWING

SCALE	SHEET	REV
NTS	2 OF 2	N5