TC55329P/J-17, TC55329P/J-20
TC55329P/J-25, TC55329P/J-35

32,768 WORD × 9 BIT CMOS STATIC RAM

DESCRIPTION

The TC55329P/J is a 294,912 bits high speed static random access memory organized as 32,768 words by 9 bits using CMOS technology, and operated from a single 5-volt supply. Toshiba's CMOS technology and advanced circuit form provide high speed feature.
The TC55329P/J has low power feature with device control using Chip Enable ($\overline{CE1}$/CE2), and has Output Enable Input ($\overline{OE}$) for fast memory access. Also the device power at memory access is reduced by automatic power down circuit form.
The TC55329P/J is suitable for use in cache memory where high speed is required. All Inputs and Outputs are directly TTL compatible.
The TC55329P/J is packaged in a 32 pin standard DIP and SOJ with 300 mil width for high density surface assembly.

FEATURES

- Fast access time :

TC55329P/J-17	17ns(MAX.)
TC55329P/J-20	20ns(MAX.)
TC55329P/J-25	25ns(MAX.)
TC55329P/J-35	35ns(MAX.)

- Low power dissipation

Operation :	TC55329P/J-17	140mA(MAX.)
	TC55329P/J-20	140mA(MAX.)
	TC55329P/J-25	140mA(MAX.)
	TC55329P/J-35	120mA(MAX.)
Standby :		1mA(MAX.)

- 5V single power supply :
  - −17 : 5V±5%
  - −20/25/35 : 5V±10%
- Fully static operation
- All Inputs and Outputs : TTL compatible
- Output buffer control : $\overline{OE}$
- Package
  - 32 pin plastic 300 mil DIP : TC55329P
  - 32 pin plastic 300 mil SOJ : TC55329J

PIN CONNECTION

PIN NAMES

A0~A14	Address Inputs
I/O1~I/O9	Data Inputs/Outputs
$\overline{CE1}$, CE2	Chip Enable Inputs
$\overline{WE}$	Write Enable Input
$\overline{OE}$	Output Enable Input
V_{DD}	Power (+5V)
GND	Ground
N.C.	No Connection

BLOCK DIAGRAM

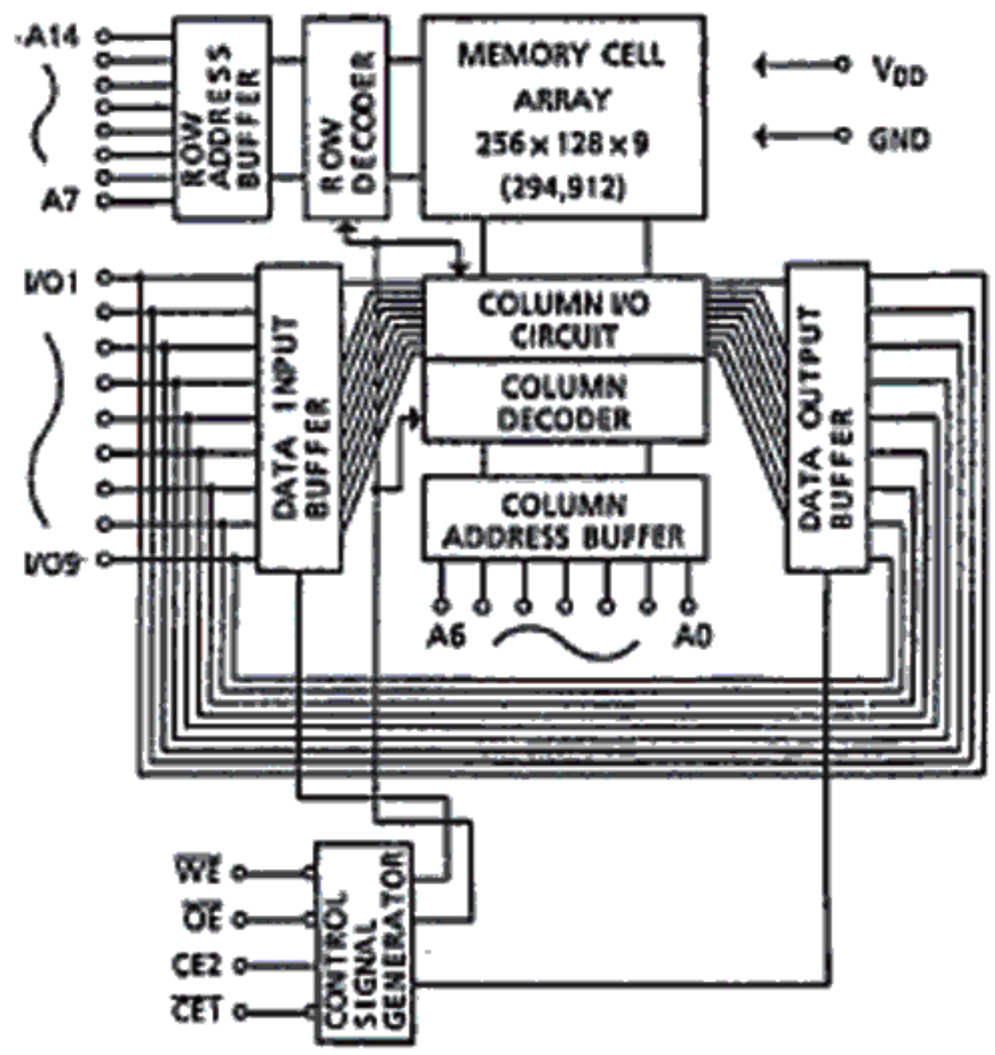

TC55329P/J−17, TC55329P/J−20
TC55329P/J−25, TC55329P/J−35

MAXIMUM RATINGS

SYMBOL	ITEM	RATING	UNIT
V_{DD}	Power Supply Voltage	−0.5~7.0	V
V_{IN}	Input Voltage	−2.0~7.0	V
$V_{I/O}$	Input/Output Voltage	−0.5~V_{DD}+0.5	V
P_D	Power Dissipation	1.0	W
T_{solder}	Soldering Temperature · Time	260 · 10	°C · sec
T_{stg}	Storage Temperature	−65~150	°C
T_{opr}	Operating Temperature	−10~85	°C

DC RECOMMENDED OPERATING CONDITIONS (Ta = 0~70°C)

SYMBOL	PARAMETER		MIN.	TYP.	MAX.	UNIT
V_{DD}	Power Supply Voltage	−17	4.75	5.0	5.25	V
		−20/25/35	4.5	5.0	5.5	
V_{IH}	Input High Voltage		2.2	−	V_{DD}+0.5	V
V_{IL}	Input Low Voltage		−0.5 *	−	0.8	V

* −3V Pulse Width : 10ns

DC and OPERATING CHARACTERISTICS (Ta = 0~70°C, −17 : V_{DD} = 5V ± 5%, −20/25/35 : V_{DD} = 5V ± 10%)

SYMBOL	PARAMETER	TEST CONDITION			MIN.	TYP.	MAX.	UNIT
I_{IL}	Input Leakage Current	V_{IN} = 0~V_{DD}			−	−	±1	μA
I_{OH}	Output High Current	V_{OH} = 2.4V			−4	−	−	mA
I_{OL}	Output Low Current	V_{OL} = 0.4V			8	−	−	mA
I_{LO}	Output Leakage Current	$\overline{CET}$ = V_{IH} or CE2 = V_{IL} or $\overline{OE}$ = V_{IH} or $\overline{WE}$ = V_{IL} V_{OUT} = 0~V_{DD}			−	−	±1	μA
I_{DDO}	Operating Current	tcycle = Min cycle $\overline{CET}$ = V_{IL} and CE2 = V_{IH} Other input = V_{IH}/V_{IL}	V_{DD} = 5.25V	−17	−	−	140	mA
			V_{DD} = 5.5V	−20	−	−	140	
				−25	−	−	140	
				−35	−	−	120	
I_{DDS1}	Standby Current	tcycle = Min cycle $\overline{CET}$ = V_{IH} or CE2 = V_{IL} Other input = V_{IH}/V_{IL}	V_{DD} = 5.25V	−17	−	−	20	mA
			V_{DD} = 5.5V	−20				
				−25				
				−35				
I_{DDS2}		$\overline{CET}$ = V_{DD} − 0.2V or CE2 = 0.2V Other input = V_{DD} − 0.2V or 0.2V			−	−	1	

CAPACITANCE (Ta = 25°C, f = 1.0MHz)

SYMBOL	PARAMETER	TEST CONDITION	MAX.	UNIT
C_{IN}	Input Capacitance	V_{IN} = GND	6	pF
C_{OUT}	Output Capacitance	V_{OUT} = GND	8	pF

Note : This parameter is periodically sampled and is not 100% tested.

TC55329P/J−17, TC55329P/J−20
TC55329P/J−25, TC55329P/J−35

AC CHARACTERISTICS (Ta = 0~70°C (1), −17 : V_{DD} = 5V ± 5%, −20/25/35 : V_{DD} = 5V ± 10%)

READ CYCLE

SYMBOL	PARAMETER	TC55329P/J−17		TC55329P/J−20		TC55329P/J−25		TC55329P/J−35		UNIT
		MIN.	MAX.	MIN.	MAX.	MIN.	MAX.	MIN.	MAX.	
t_{RC}	Read Cycle Time	17	−	20	−	25	−	35	−	ns
t_{ACC}	Address Access Time	−	17	−	20	−	25	−	35	
t_{CO1}	$\overline{CE1}$ Access Time	−	17	−	20	−	25	−	35	
t_{CO2}	CE2 Access Time	−	17	−	20	−	25	−	35	
t_{OE}	$\overline{OE}$ Access Time	−	9	−	10	−	12	−	15	
t_{OH}	Output Data Hold Time from Address Change	5	−	5	−	5	−	5	−	
t_{COE}	Output Enable Time from $\overline{CE1}$ or CE2	5	−	5	−	5	−	5	−	
t_{COD}	Output Disable Time from $\overline{CE1}$ or CE2	−	10	−	10	−	10	−	15	
t_{OEE}	Output Enable Time from $\overline{OE}$	0	−	0	−	0	−	0	−	
t_{ODO}	Output Disable Time from $\overline{OE}$	−	8	−	8	−	10	−	15	
t_{PU}	Chip Selection to Power Up Time	0	−	0	−	0	−	0	−	
t_{PD}	Chip Deselection to Power Down Time	−	17	−	20	−	25	−	35	

WRITE CYCLE

SYMBOL	PARAMETER	TC55329P/J−17		TC55329P/J−20		TC55329P/J−25		TC55329P/J−35		UNIT
		MIN.	MAX.	MIN.	MAX.	MIN.	MAX.	MIN.	MAX.	
t_{WC}	Write Cycle Time	17	−	20	−	25	−	35	−	ns
t_{CW}	Chip Enable to End of Write	13	−	13	−	15	−	20	−	
t_{AS}	Address Set Up Time	0	−	0	−	0	−	0	−	
t_{WP}	Write Pulse Width	13	−	13	−	15	−	20	−	
t_{WR}	Write Recovery Time	0	−	0	−	0	−	0	−	
t_{DS}	Data Set Up Time	10	−	10	−	12	−	15	−	
t_{DH}	Data Hold Time	0	−	0	−	0	−	0		
t_{OEW}	Output Enable Time from $\overline{WE}$	0	−	0	−	0	−	0	−	
t_{ODW}	Output Disable Time from $\overline{WE}$	−	8	−	8	−	10	−	15	

AC TEST CONDITIONS

Input Pulse Levels	3.0V/0.0V
Input Pulse Rise and Fall Time	3ns
Input Timing Measurement Reference Levels	2.2V/0.8V
Output Timing Measurement Reference Levels	2.0V/0.8V
Output Load	Fig.1

Fig.1

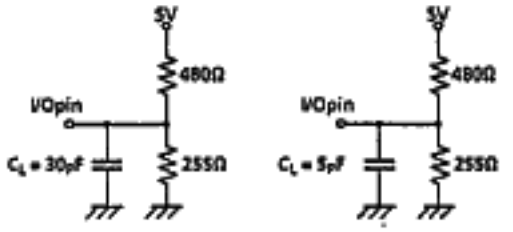

(For t_{COE}, t_{OEE}, t_{COD}, t_{ODO}, t_{OEW} and t_{ODW})

TC55329P/J−17, TC55329P/J−20
TC55329P/J−25, TC55329P/J−35

TIMING WAVEFORMS

READ CYCLE (2)

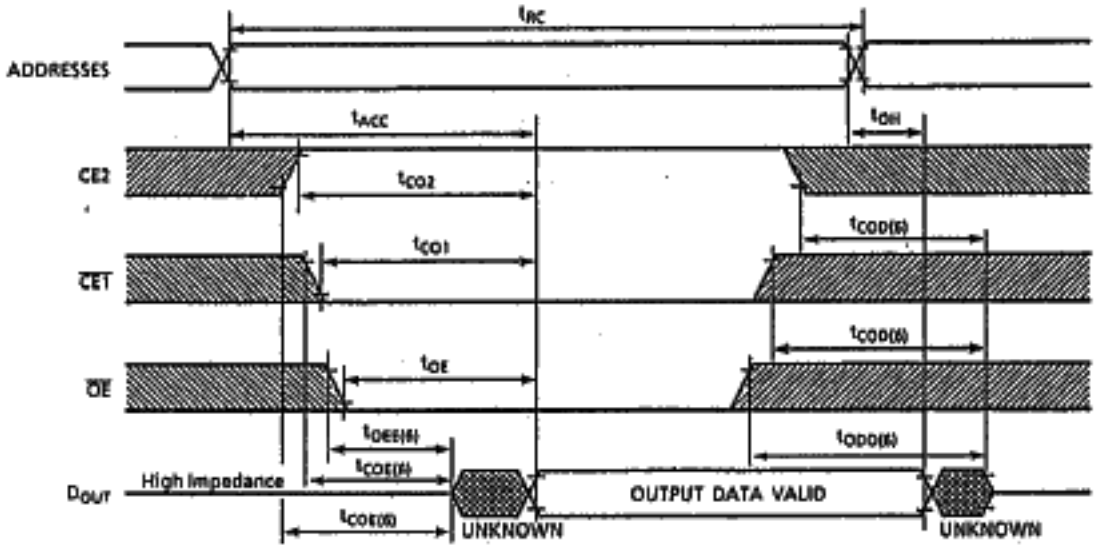

WRITE CYCLE1 (5) ($\overline{WE}$ Controlled Write)

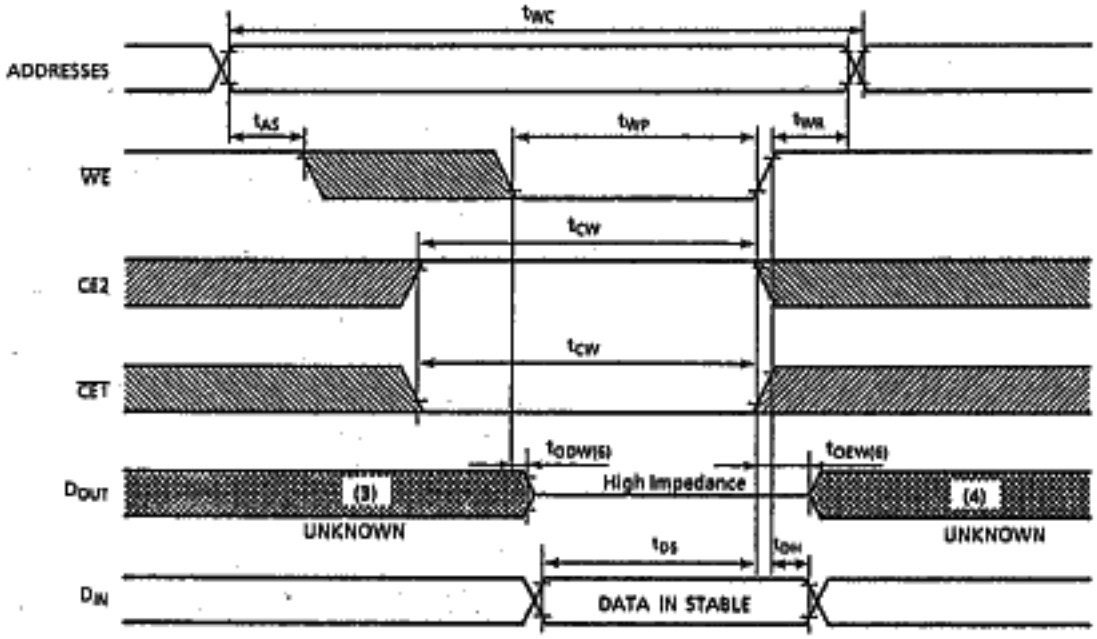

WRITE CYCLE2 (5) ($\overline{CET}$ Controlled Write)

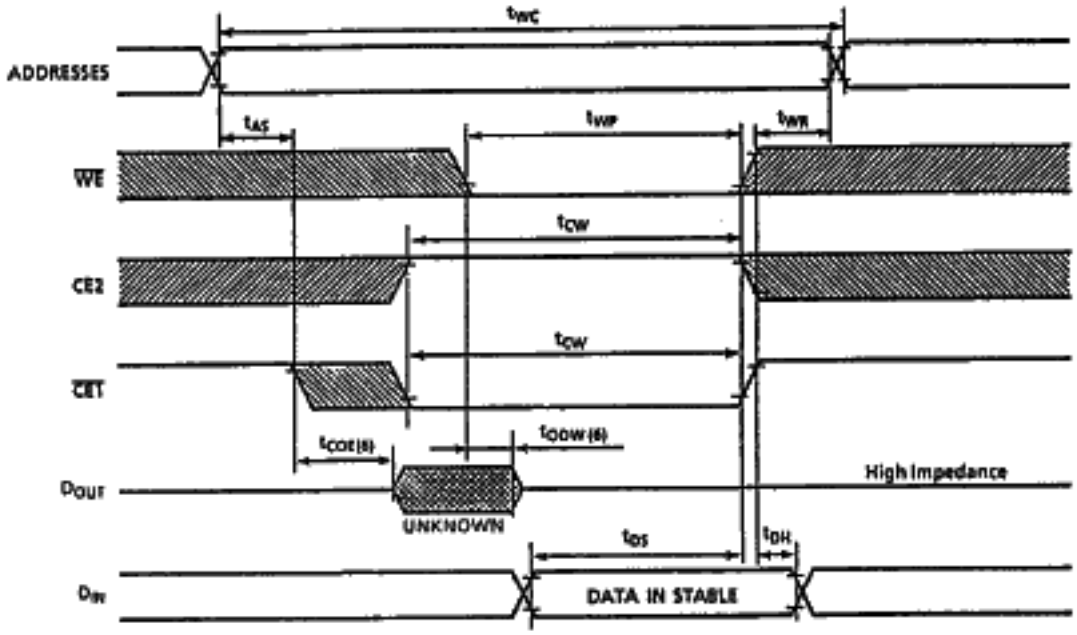

WRITE CYCLE 3 (5) (CE2 Controlled Write)

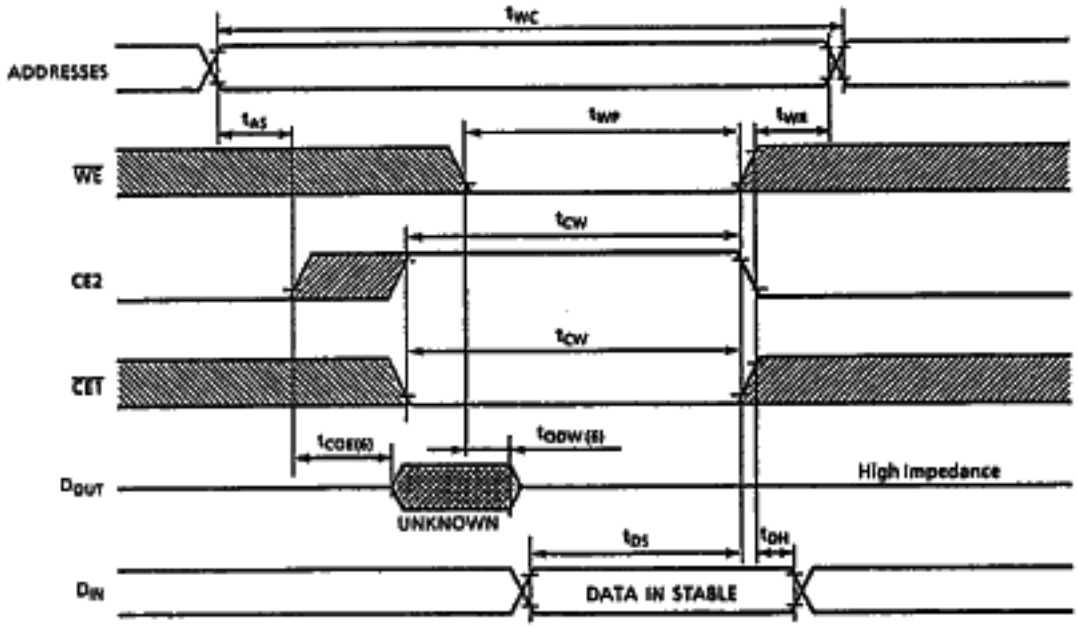

TC55329P/J−17, TC55329P/J−20
TC55329P/J−25, TC55329P/J−35

NOTE: 1. The operating temperature (Ta) is guaranteed with transverse air flow exceeding 400 linear feet per minute.

2. $\overline{WE}$ is High for Read Cycle.

3. Assuming that $\overline{CE1}$ Low transition or CE2 High transition occurs coincident with or after $\overline{WE}$ Low transition, Outputs remain in a high impedance state.

4 Assuming that $\overline{CE1}$ High transition or CE2 Low transition occurs coincident with or prior to $\overline{WE}$ High transition, Outputs remain in a high impedance state.

5. Assuming that $\overline{OE}$ is High for Write Cycle, Outputs are in a high impedance state during this period.

6. These parameters are specified as follows and measured by using the load shown in Fig.1.

(A) t_{COE}, t_{OEE}, t_{OEW} ..... Output Enable Time

(B) t_{COD}, t_{ODO}, t_{ODW} ..... Output Disable Time

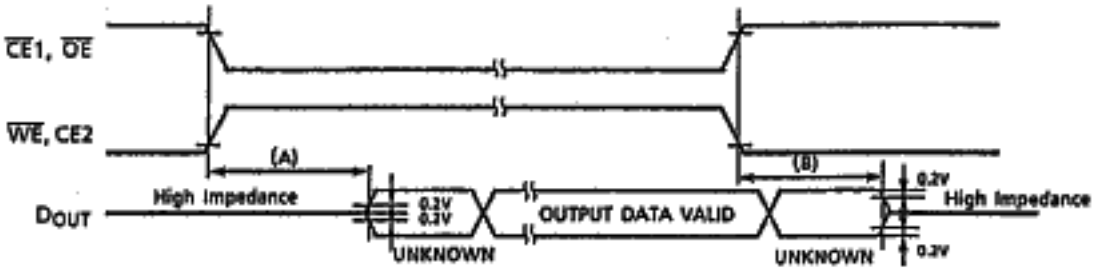

TC55329P/J−17, TC55329P/J−20
TC55329P/J−25, TC55329P/J−35

OUTLINE DRAWINGS

Plastic DIP (DIP32-P-300)

UNIT in mm

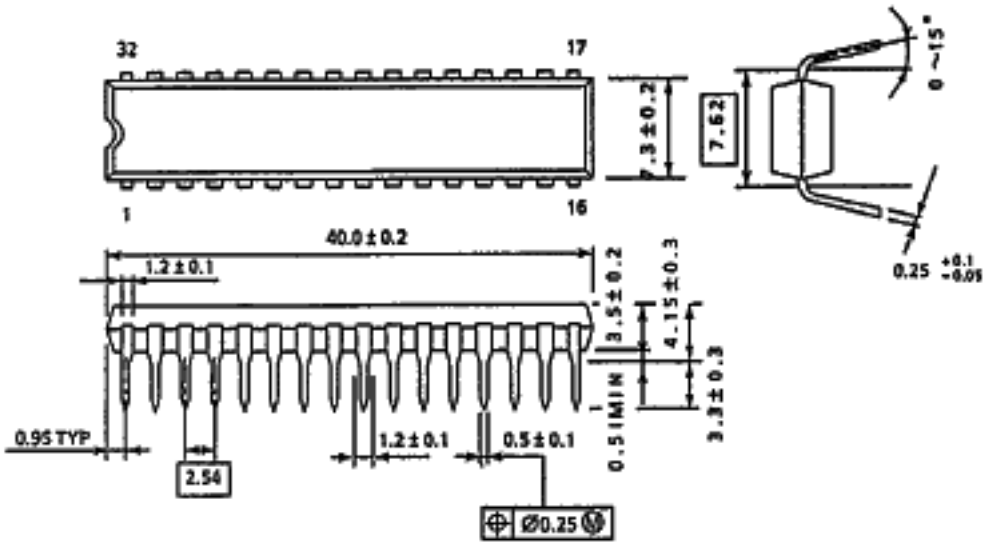

Note: Package width and length do not include mold protrusion, allowable mold protrusion is 0.15mm.

TC55329P/J−17, TC55329P/J−20
TC55329P/J−25, TC55329P/J−35

OUTLINE DRAWINGS

Plastic SOJ (SOJ32 − P − 300)

UNIT in mm

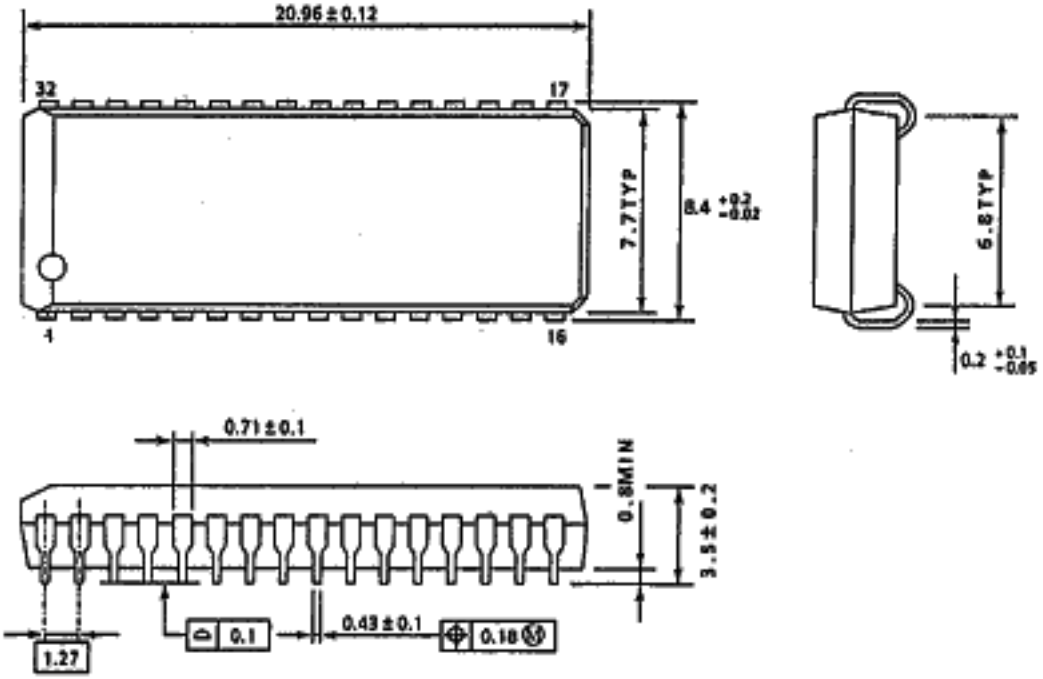

Note : Package width and length do not include mold protrusion, allowable mold protrusion is 0.15mm