WG12864B GraPhic 128x64dots

Dimension drawing

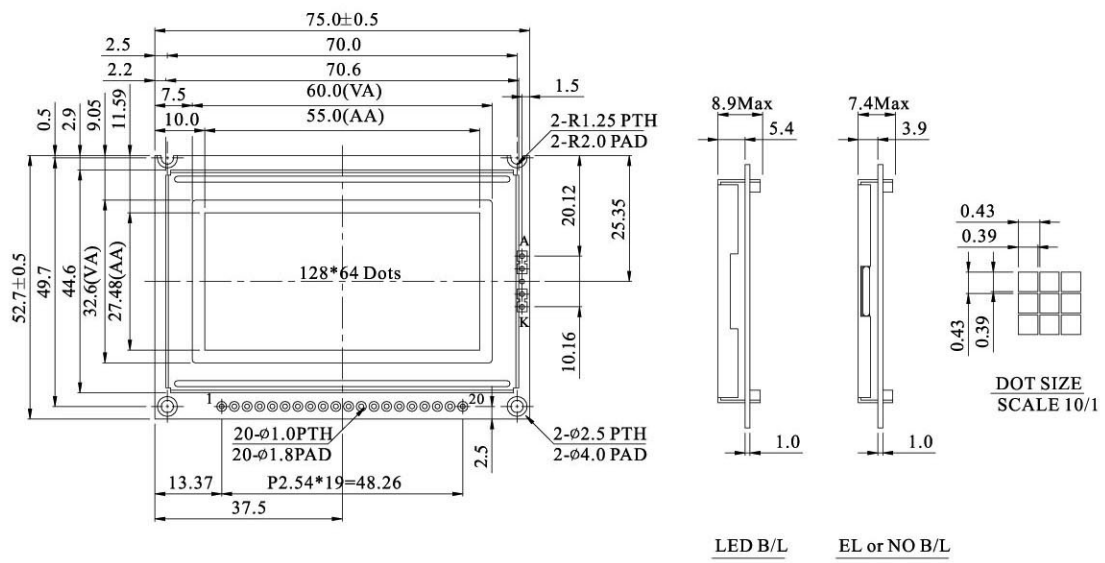

Feature

1. Built-in controller Samsung- (KS0107、KS0108 or equivalent)
2. +5V power supply
3. 1/64 duty cycle
4. N.V Built-in

Pin NO.	Symbol	Function
1	Vdd	Power Supply(+5V)
2	GND	Power Supply(GND)
3	Vo	Contrast Adjustment
4	DB0	Data bus line
5	DB1	Data bus line
6	DB2	Data bus line
7	DB3	Data bus line
8	DB4	Data bus line
9	DB5	Data bus line
10	DB6	Data bus line
11	DB7	Data bus line
12	CS1	Chip select IC1
13	CS2	Chip select IC2
14	$\overline{RST}$	Reset signal
15	R/$\overline{W}$	Data read/write
16	D/I	Data /instruction
17	E	Enable signal
18	Vee	Negative Voltage output (+4.2V)
19	A	Power supply for LED
20	K	Power supply for LED (0V)

Mechanical Data

Item	Standard Value	Unit
Module Dimension	75.0x52.7	mm
Viewing Area	60.0x32.6	mm
Mounting hole	70.0x 49.7	mm
Dot Pitch	0.43x0.43	mm

Absolute Maximum Rating

Item	Symbol	Standard Value			Unit
		min.	typ.	max.	
Power Supply	VDD-VSS	4.75	5.0	5.25	V
Input Voltage	VI	-0.3	---	VDD	V

Note：VSS=0 Volt, VDD=5.0 Volt.

Electronical Characteristics

Item	Symbol	Condition	Standard Value			Unit
			min.	typ.	max.	
Input Voltage	VDD	L level	$0.7V_{DD}$	---	V_{DD}	V
	VIO	H level	0	---	$0.3V_{DD}$	V
Supply Current	IDD	VDD=5V	---	4.0	5.2	mA
Recommended LC Driving Voltage for Normal Temp. Version module	VDD-V0	0℃	9.7	10.2	10.7	V
		25℃	7.5	8.0	8.5	
		50℃	8.6	9.1	9.6	
LED Forward Voltage	VF	25℃	---	4.0	4.4	V
LED Forward Current	IF	25℃ Edge	---	100	200	mA
EL Power Supply Current	IEL	Vel=110VAC;400Hz	---	---	5.0	mA

Graphic type

This datasheet has been downloaded from:

www.DatasheetCatalog.com

Datasheets for electronic components.