KIA78S05P~ KIA78S24P

BIPOLAR LINEAR INTEGRATED CIRCUIT\

THREE TERMINAL POSITIVE VOLTAGE REGULATORS
5V, 6V, 7V, 8V, 9V, 10V, 12V, 13V, 15V, 18V, 20V, 24V.

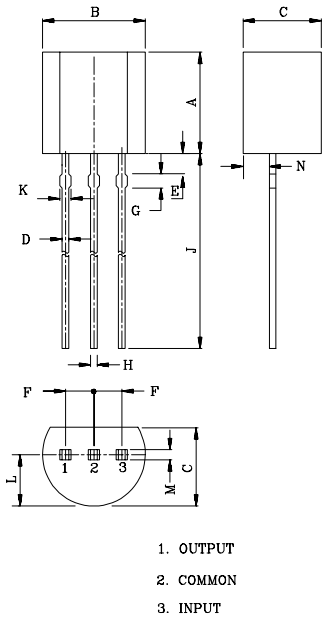

DIM	MILLIMETERS
A	4.70 MAX
B	4.80 MAX
C	3.70 MAX
D	0.45
E	1.00
F	1.27
G	0.85
H	0.45
J	14.00± 0.50
K	0.55 MAX
L	2.30
M	0.45 MAX
N	1.00

TO-92

FEATURES

- Suitable for TTL, DTL, HTL, C-MOS Power Supply.
- Internal Short-Circuit Current Limiting.
  Internal Thermal Overload Protection.
- Maximum Output Current of 150mA (T_j=25℃).
- Packaged in TO-92.

MAXIMUM RATINGS (Ta=25℃)

CHARACTERISTIC		SYMBOL	RATING	UNIT
Input Voltage	(5V~15V)	V_{IN}	35	V
	(18V~24V)		40	V
Power Dissipation		P_D	600	mW
Operating Junction Temperature		T_j	-30~150	℃
Operating Temperature		T_{opr}	-30~75	℃
Storage Temperature		T_{stg}	-55~150	℃

EQUIVALENT CIRCUIT

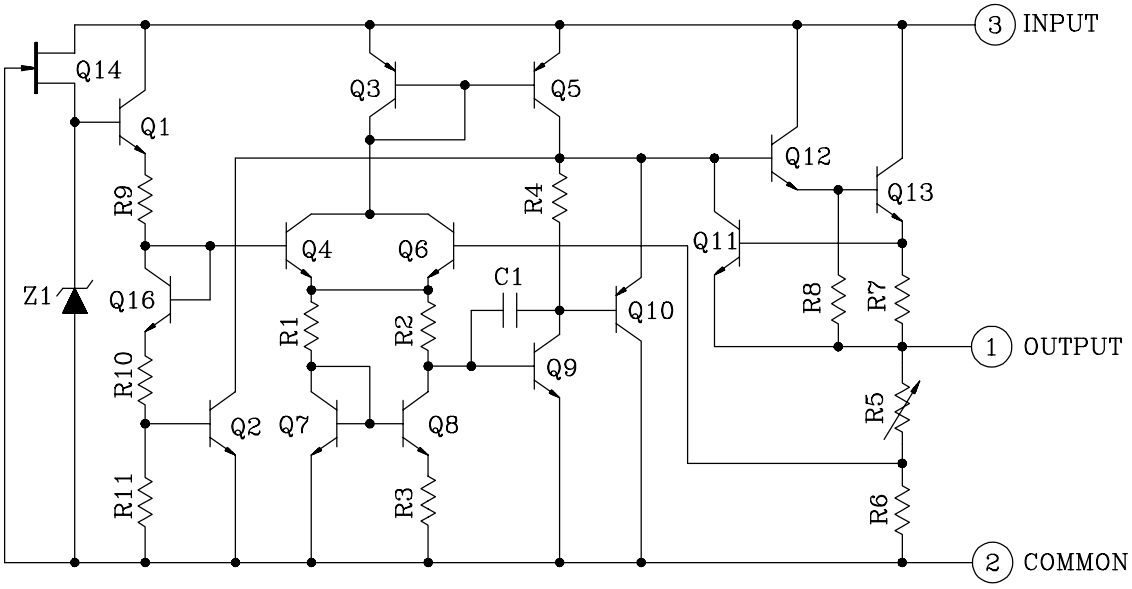

ELECTRICAL CHARACTERISTICS
KIA78S05P
(Unless otherwise specified, V_{IN}=10V, I_{OUT}=40mA, C_{IN}=0.33μF, C_{OUT}=0.1μF, 0℃≦T_j≦125℃)

CHARACTERISTIC	SYMBOL	TEST CIRCUIT	TEST CONDITION		MIN.	TYP.	MAX.	UNIT
Output Voltage	V_{OUT}	1	T_j=25℃		4.8	5.0	5.2	V
Input Regulation	Reg line	1	T_j=25℃	7.0V≦V_{IN}≦20V	-	55	150	mV
				8.0V≦V_{IN}≦20V	-	45	100	
Load Regulation	Reg load	1	T_j=25℃	1.0mA≦I_{OUT}≦100mA	-	11	60	mV
				1.0mA≦I_{OUT}≦40mA	-	5.0	30	
Output Voltage	V_{OUT}	1	7.0V≦V_{IN}≦20V 1.0mA≦I_{OUT}≦40mA		4.75	-	5.25	V
			V_{IN}=10V, 1.0mA≦I_{OUT}≦70mA		4.75	-	5.25	
Quiescent Current	I_B	1	T_j=25℃		-	3.1	6.0	mA
			T_j=125℃		-	-	5.5	
Quiescent Current Change	ΔI_B	1	8.0V≦V_{IN}≦20V		-	-	1.5	mA
			1.0mA≦I_{OUT}≦40mA		-	-	0.1	
Output Noise Voltage	V_{NO}	1	Ta=25℃, 10Hz≦f≦100kHz		-	40	-	μV_{rms}
Long Term Stability	$\Delta V_{OUT}/\Delta t$	1			-	12	-	mV/ 1.0kHrs
Ripple Rejection Ratio	RR	2	f=120Hz, 8.0V≦V_{IN}≦18V, T_j=25℃		41	49	-	dB
Dropout Voltage	$\lvert V_{IN}-V_{OUT} \rvert$	1	T_j=25℃		-	1.7	-	V
Average Temperature Coefficient of Output Voltage	TC_{VO}	1	I_{OUT}=5mA		-	-0.6	-	mV/℃

ELECTRICAL CHARACTERISTICS
KIA78S06P
(Unless otherwise specified, V_{IN}=11V, I_{OUT}=40mA, C_{IN}=0.33μF, C_{OUT}=0.1μF, 0℃≦T_j≦125℃)

CHARACTERISTIC	SYMBOL	TEST CIRCUIT	TEST CONDITION		MIN.	TYP.	MAX.	UNIT
Output Voltage	V_{OUT}	1	T_j=25℃		5.76	6.0	6.24	V
Input Regulation	Reg line	1	T_j=25℃	8.1V≦V_{IN}≦21V	-	50	150	mV
				9.0V≦V_{IN}≦21V	-	45	110	
Load Regulation	Reg load	1	T_j=25℃	1.0mA≦I_{OUT}≦100mA	-	12	70	mV
				1.0mA≦I_{OUT}≦40mA	-	5.5	35	
Output Voltage	V_{OUT}	1	8.1V≦V_{IN}≦21V 1.0mA≦I_{OUT}≦40mA		5.7	-	6.3	V
			V_{IN}=11V, 1.0mA≦I_{OUT}≦70mA		5.7	-	6.3	
Quiescent Current	I_B	1	T_j=25℃		-	3.1	6.0	mA
			T_j=125℃		-	-	5.5	
Quiescent Current Change	ΔI_B	1	9.0V≦V_{IN}≦20V		-	-	1.5	mA
			1.0mA≦I_{OUT}≦40mA		-	-	0.1	
Output Noise Voltage	V_{NO}	1	Ta=25℃, 10Hz≦f≦100kHz		-	40	-	μV_{rms}
Long Term Stability	$\Delta V_{OUT}/\Delta t$	1			-	14	-	mV/ 1.0kHrs
Ripple Rejection Ratio	RR	2	f=120Hz, 9.0V≦V_{IN}≦19V, T_j=25℃		39	47	-	dB
Dropout Voltage	$\lvert V_{IN}-V_{OUT} \rvert$	1	T_j=25℃		-	1.7	-	V
Average Temperature Coefficient of Output Voltage	TC_{VO}	1	I_{OUT}=5mA		-	-0.7	-	mV/℃

ELECTRICAL CHARACTERISTICS
KIA78S07P
(Unless otherwise specified, V_{IN}=12V, I_{OUT}=40mA, C_{IN}=0.33μF, C_{OUT}=0.1μF, 0℃≦T_j≦125℃)

CHARACTERISTIC	SYMBOL	TEST CIRCUIT	TEST CONDITION		MIN.	TYP.	MAX.	UNIT
Output Voltage	V_{OUT}	1	T_j=25℃		6.72	7.0	7.28	V
Input Regulation	Reg line	1	T_j=25℃	9.2V≦V_{IN}≦22V	-	50	160	mV
				10V≦V_{IN}≦22V	-	45	115	
Load Regulation	Reg load	1	T_j=25℃	1.0mA≦I_{OUT}≦100mA	-	13	75	mV
				1.0mA≦I_{OUT}≦40mA	-	6.0	40	
Output Voltage	V_{OUT}	1	9.2V≦V_{IN}≦22V 1.0mA≦I_{OUT}≦40mA		6.65	-	7.35	V
			V_{IN}=12V, 1.0mA≦I_{OUT}≦70mA		6.65	-	7.35	
Quiescent Current	I_B	1	T_j=25℃		-	3.1	6.5	mA
			T_j=125℃		-	-	6.0	
Quiescent Current Change	ΔI_B	1	10V≦V_{IN}≦22V		-	-	1.5	mA
			1.0mA≦I_{OUT}≦40mA		-	-	0.1	
Output Noise Voltage	V_{NO}	1	Ta=25℃, 10Hz≦f≦100kHz		-	50	-	μV_{rms}
Long Term Stability	$\Delta V_{OUT}/\Delta t$	1			-	17	-	mV/ 1.0kHrs
Ripple Rejection Ratio	RR	2	f=120Hz, 10V≦V_{IN}≦20V, T_j=25℃		37	46	-	dB
Dropout Voltage	$\lvert V_{IN}-V_{OUT} \rvert$	1	T_j=25℃		-	1.7	-	V
Average Temperature Coefficient of Output Voltage	TC_{VO}	1	I_{OUT}=5mA		-	-0.75	-	mV/℃

ELECTRICAL CHARACTERISTICS
KIA78S08P
(Unless otherwise specified, V_{IN}=14V, I_{OUT}=40mA, C_{IN}=0.33μF, C_{OUT}=0.1μF, 0℃≦T_j≦125℃)

CHARACTERISTIC	SYMBOL	TEST CIRCUIT	TEST CONDITION		MIN.	TYP.	MAX.	UNIT
Output Voltage	V_{OUT}	1	T_j=25℃		7.7	8.0	8.3	V
Input Regulation	Reg line	1	T_j=25℃	10.5V≦V_{IN}≦23V	-	20	175	mV
				11V≦V_{IN}≦23V	-	12	125	
Load Regulation	Reg load	1	T_j=25℃	1.0mA≦I_{OUT}≦100mA	-	15	80	mV
				1.0mA≦I_{OUT}≦40mA	-	7.0	40	
Output Voltage	V_{OUT}	1	10.5V≦V_{IN}≦23V 1.0mA≦I_{OUT}≦40mA		7.6	-	8.4	V
			V_{IN}=14V, 1.0mA≦I_{OUT}≦70mA		7.6	-	8.4	
Quiescent Current	I_B	1	T_j=25℃		-	3.1	6.5	mA
			T_j=125℃		-	-	6.0	
Quiescent Current Change	ΔI_B	1	11V≦V_{IN}≦23V		-	-	1.5	mA
			1.0mA≦I_{OUT}≦40mA		-	-	0.1	
Output Noise Voltage	V_{NO}	1	Ta=25℃, 10Hz≦f≦100kHz		-	60	-	μV_{rms}
Long Term Stability	$\Delta V_{OUT}/\Delta t$	1			-	20	-	mV/ 1.0kHrs
Ripple Rejection Ratio	RR	2	f=120Hz, 12V≦V_{IN}≦23V, T_j=25℃		37	45	-	dB
Dropout Voltage	$\lvert V_{IN}-V_{OUT} \rvert$	1	T_j=25℃		-	1.7	-	V
Average Temperature Coefficient of Output Voltage	TC_{VO}	1	I_{OUT}=5mA		-	-0.8	-	mV/℃

ELECTRICAL CHARACTERISTICS
KIA78S09P
(Unless otherwise specified, V_{IN}=15V, I_{OUT}=40mA, C_{IN}=0.33μF, C_{OUT}=0.1μF, 0℃≦T_j≦125℃)

CHARACTERISTIC	SYMBOL	TEST CIRCUIT	TEST CONDITION		MIN.	TYP.	MAX.	UNIT
Output Voltage	V_{OUT}	1	T_j=25℃		8.64	9.0	9.36	V
Input Regulation	Reg line	1	T_j=25℃	11.4V≦V_{IN}≦24V	-	80	200	mV
				12V≦V_{IN}≦24V	-	20	160	
Load Regulation	Reg load	1	T_j=25℃	1.0mA≦I_{OUT}≦100mA	-	17	90	mV
				1.0mA≦I_{OUT}≦40mA	-	8.0	45	
Output Voltage	V_{OUT}	1	11.4V≦V_{IN}≦24V 1.0mA≦I_{OUT}≦40mA		8.55	-	9.45	V
			V_{IN}=15V, 1.0mA≦I_{OUT}≦70mA		8.55	-	9.45	
Quiescent Current	I_B	1	T_j=25℃		-	3.2	6.5	mA
			T_j=125℃		-	-	6.0	
Quiescent Current Change	ΔI_B	1	11.5V≦V_{IN}≦26V		-	-	1.5	mA
			1.0mA≦I_{OUT}≦40mA		-	-	0.1	
Output Noise Voltage	V_{NO}	1	Ta=25℃, 10Hz≦f≦100kHz		-	65	-	μV_{rms}
Long Term Stability	$\Delta V_{OUT}/\Delta t$	1			-	21	-	mV/ 1.0kHrs
Ripple Rejection Ratio	RR	2	f=120Hz, 12V≦V_{IN}≦24V, T_j=25℃		36	44	-	dB
Dropout Voltage	$\lvert V_{IN}-V_{OUT} \rvert$	1	T_j=25℃		-	1.7	-	V
Average Temperature Coefficient of Output Voltage	TC_{VO}	1	I_{OUT}=5mA		-	-0.85	-	mV/℃

ELECTRICAL CHARACTERISTICS
KIA78S10P
(Unless otherwise specified, V_{IN}=16V, I_{OUT}=40mA, C_{IN}=0.33μF, C_{OUT}=0.1μF, 0℃≦T_j≦125℃)

CHARACTERISTIC	SYMBOL	TEST CIRCUIT	TEST CONDITION		MIN.	TYP.	MAX.	UNIT
Output Voltage	V_{OUT}	1	T_j=25℃		9.6	10	10.4	V
Input Regulation	Reg line	1	T_j=25℃	12.5V≦V_{IN}≦25V	-	80	230	mV
				13V≦V_{IN}≦25V	-	30	170	
Load Regulation	Reg load	1	T_j=25℃	1.0mA≦I_{OUT}≦100mA	-	18	90	mV
				1.0mA≦I_{OUT}≦40mA	-	8.5	45	
Output Voltage	V_{OUT}	1	12.5V≦V_{IN}≦25V 1.0mA≦I_{OUT}≦40mA		9.5	-	10.5	V
			V_{IN}=16V, 1.0mA≦I_{OUT}≦70mA		9.5	-	10.5	
Quiescent Current	I_B	1	T_j=25℃		-	3.2	6.5	mA
			T_j=125℃		-	-	6.0	
Quiescent Current Change	ΔI_B	1	13V≦V_{IN}≦25V		-	-	1.5	mA
			1.0mA≦I_{OUT}≦40mA		-	-	0.1	
Output Noise Voltage	V_{NO}	1	Ta=25℃, 10Hz≦f≦100kHz		-	70	-	μV_{rms}
Long Term Stability	$\Delta V_{OUT}/\Delta t$	1			-	22	-	mV/ 1.0kHrs
Ripple Rejection Ratio	RR	2	f=120Hz, 13V≦V_{IN}≦24V, T_j=25℃		36	43	-	dB
Dropout Voltage	$\lvert V_{IN}-V_{OUT} \rvert$	1	T_j=25℃		-	1.7	-	V
Average Temperature Coefficient of Output Voltage	TC_{VO}	1	I_{OUT}=5mA		-	-0.9	-	mV/℃

ELECTRICAL CHARACTERISTICS
KIA78S12P
(Unless otherwise specified, V_{IN}=19V, I_{OUT}=40mA, C_{IN}=0.33μF, C_{OUT}=0.1μF, 0℃≦T_j≦125℃)

CHARACTERISTIC	SYMBOL	TEST CIRCUIT	TEST CONDITION		MIN.	TYP.	MAX.	UNIT
Output Voltage	V_{OUT}	1	T_j=25℃		11.5	12	12.5	V
Input Regulation	Reg line	1	T_j=25℃	14.5V≦V_{IN}≦27V	-	120	250	mV
				16V≦V_{IN}≦27V	-	100	200	
Load Regulation	Reg load	1	T_j=25℃	1.0mA≦I_{OUT}≦100mA	-	20	100	mV
				1.0mA≦I_{OUT}≦40mA	-	10	50	
Output Voltage	V_{OUT}	1	14.5V≦V_{IN}≦27V 1.0mA≦I_{OUT}≦40mA		11.4	-	12.6	V
			V_{IN}=19V, 1.0mA≦I_{OUT}≦70mA		11.4	-	12.6	
Quiescent Current	I_B	1	T_j=25℃		-	3.2	6.5	mA
			T_j=125℃		-	-	6.0	
Quiescent Current Change	ΔI_B	1	16V≦V_{IN}≦27V		-	-	1.5	mA
			1.0mA≦I_{OUT}≦40mA		-	-	0.1	
Output Noise Voltage	V_{NO}	1	Ta=25℃, 10Hz≦f≦100kHz		-	80	-	μV_{rms}
Long Term Stability	$\Delta V_{OUT}/\Delta t$	1			-	24	-	mV/ 1.0kHrs
Ripple Rejection Ratio	RR	2	f=120Hz, 15V≦V_{IN}≦25V, T_j=25℃		36	41	-	dB
Dropout Voltage	$\lvert V_{IN}-V_{OUT} \rvert$	1	T_j=25℃		-	1.7	-	V
Average Temperature Coefficient of Output Voltage	TC_{VO}	1	I_{OUT}=5mA		-	-1.0	-	mV/℃

ELECTRICAL CHARACTERISTICS
KIA78S13P
(Unless otherwise specified, V_{IN}=21V, I_{OUT}=40mA, C_{IN}=0.33μF, C_{OUT}=0.1μF, 0℃≦T_j≦125℃)

CHARACTERISTIC	SYMBOL	TEST CIRCUIT	TEST CONDITION		MIN.	TYP.	MAX.	UNIT
Output Voltage	V_{OUT}	1	T_j=25℃		12.45	13	13.55	V
Input Regulation	Reg line	1	T_j=25℃	16V≦V_{IN}≦28V	-	125	270	mV
				17V≦V_{IN}≦28V	-	105	225	
Load Regulation	Reg load	1	T_j=25℃	1.0mA≦I_{OUT}≦100mA	-	22	120	mV
				1.0mA≦I_{OUT}≦40mA	-	11	60	
Output Voltage	V_{OUT}	1	16V≦V_{IN}≦28V 1.0mA≦I_{OUT}≦40mA		12.54	-	13.86	V
			V_{IN}=21V, 1.0mA≦I_{OUT}≦70mA		12.54	-	13.86	
Quiescent Current	I_B	1	T_j=25℃		-	3.2	6.5	mA
			T_j=125℃		-	3.2	6.0	
Quiescent Current Change	ΔI_B	1	17V≦V_{IN}≦28V		-	-	1.5	mA
			1.0mA≦I_{OUT}≦40mA		-	-	0.1	
Output Noise Voltage	V_{NO}	1	Ta=25℃, 10Hz≦f≦100kHz		-	90	-	μV_{rms}
Long Term Stability	$\Delta V_{OUT}/\Delta t$	1			-	28	-	mV/ 1.0kHrs
Ripple Rejection Ratio	RR	2	f=120Hz, 17V≦V_{IN}≦27V, T_j=25℃		34	41	-	dB
Dropout Voltage	$\lvert V_{IN}-V_{OUT} \rvert$	1	T_j=25℃		-	1.7	-	V
Average Temperature Coefficient of Output Voltage	TC_{VO}	1	I_{OUT}=5mA		-	-1.2	-	mV/℃

ELECTRICAL CHARACTERISTICS
KIA78S15P
(Unless otherwise specified, V_{IN}=23V, I_{OUT}=40mA, C_{IN}=0.33μF, C_{OUT}=0.1μF, 0℃≦Tj≦125℃)

CHARACTERISTIC	SYMBOL	TEST CIRCUIT	TEST CONDITION		MIN.	TYP.	MAX.	UNIT
Output Voltage	V_{OUT}	1	T_j=25℃		14.4	15	15.6	V
Input Regulation	Reg line	1	T_j=25℃	17.5V≦V_{IN}≦30V	-	130	300	mV
				20V≦V_{IN}≦30V	-	110	250	
Load Regulation	Reg load	1	T_j=25℃	1.0mA≦I_{OUT}≦100mA	-	25	150	mV
				1.0mA≦I_{OUT}≦40mA	-	12	75	
Output Voltage	V_{OUT}	1	17.5V≦V_{IN}≦30V 1.0mA≦I_{OUT}≦40mA		14.25	-	15.75	V
			V_{IN}=23V, 1.0mA≦I_{OUT}≦70mA		14.25	-	15.75	
Quiescent Current	I_B	1	T_j=25℃		-	3.3	6.5	mA
			T_j=125℃		-	-	6.0	
Quiescent Current Change	ΔI_B	1	20V≦V_{IN}≦30V		-	-	1.5	mA
			1.0mA≦I_{OUT}≦40mA		-	-	0.1	
Output Noise Voltage	V_{NO}	1	Ta=25℃, 10Hz≦f≦100kHz		-	90	-	μV_{rms}
Long Term Stability	$\Delta V_{OUT}/\Delta t$	1			-	30	-	mV/ 1.0kHrs
Ripple Rejection Ratio	RR	2	f=120Hz, 18.5V≦V_{IN}≦28.5V, T_j=25℃		34	40	-	dB
Dropout Voltage	$\lvert V_{IN}-V_{OUT} \rvert$	1	T_j=25℃		-	1.7	-	V
Average Temperature Coefficient of Output Voltage	TC_{VO}	1	I_{OUT}=5mA		-	-1.3	-	mV/℃

ELECTRICAL CHARACTERISTICS
KIA78S18P
(Unless otherwise specified, V_{IN}=27V, I_{OUT}=40mA, C_{IN}=0.33μF, C_{OUT}=0.1μF, 0℃≦T_j≦125℃)

CHARACTERISTIC	SYMBOL	TEST CIRCUIT	TEST CONDITION		MIN.	TYP.	MAX.	UNIT
Output Voltage	V_{OUT}	1	T_j=25℃		17.3	18	18.7	V
Input Regulation	Reg line	1	T_j=25℃	21.4V≦V_{IN}≦33V	-	32	325	mV
				22V≦V_{IN}≦33V	-	27	275	
Load Regulation	Reg load	1	T_j=25℃	1.0mA≦I_{OUT}≦100mA	-	30	170	mV
				1.0mA≦I_{OUT}≦40mA	-	15	75	
Output Voltage	V_{OUT}	1	21.4V≦V_{IN}≦33V 1.0mA≦I_{OUT}≦40mA		17.1	-	18.9	V
			V_{IN}=27V, 1.0mA≦I_{OUT}≦70mA		17.1	-	18.9	
Quiescent Current	I_B	1	T_j=25℃		-	3.3	6.5	mA
			T_j=125℃		-	-	6.0	
Quiescent Current Change	ΔI_B	1	22V≦V_{IN}≦33V		-	-	1.5	mA
			1.0mA≦I_{OUT}≦40mA		-	-	0.1	
Output Noise Voltage	V_{NO}	1	Ta=25℃, 10Hz≦f≦100kHz		-	150	-	μV_{rms}
Long Term Stability	$\Delta V_{OUT}/\Delta t$	1			-	45	-	mV/ 1.0kHrs
Ripple Rejection Ratio	RR	2	f=120Hz, 23V≦V_{IN}≦33V, T_j=25℃		32	38	-	dB
Dropout Voltage	$\lvert V_{IN}-V_{OUT} \rvert$	1	T_j=25℃		-	1.7	-	V
Average Temperature Coefficient of Output Voltage	TC_{VO}	1	I_{OUT}=5mA		-	-1.5	-	mV/℃

ELECTRICAL CHARACTERISTICS
KIA78S20P
(Unless otherwise specified, V_{IN}=29V, I_{OUT}=40mA, C_{IN}=0.33μF, C_{OUT}=0.1μF, 0℃≦T_j≦125℃)

CHARACTERISTIC	SYMBOL	TEST CIRCUIT	TEST CONDITION		MIN.	TYP.	MAX.	UNIT
Output Voltage	V_{OUT}	1	T_j=25℃		19.2	20	20.8	V
Input Regulation	Reg line	1	T_j=25℃	23.5V≦V_{IN}≦35V	-	33	330	mV
				24V≦V_{IN}≦35V	-	28	285	
Load Regulation	Reg load	1	T_j=25℃	1.0mA≦I_{OUT}≦100mA	-	33	180	mV
				1.0mA≦I_{OUT}≦40mA	-	17	90	
Output Voltage	V_{OUT}	1	23.5V≦V_{IN}≦35V 1.0mA≦I_{OUT}≦40mA		19.0	-	21.0	V
			V_{IN}=29V, 1.0mA≦I_{OUT}≦70mA		19.0	-	21.0	
Quiescent Current	I_B	1	T_j=25℃		-	3.3	6.5	mA
			T_j=125℃		-	-	6.0	
Quiescent Current Change	ΔI_B	1	24V≦V_{IN}≦35V		-	-	1.5	mA
			1.0mA≦I_{OUT}≦40mA		-	-	0.1	
Output Noise Voltage	V_{NO}	1	Ta=25℃, 10Hz≦f≦100kHz		-	170	-	μV_{rms}
Long Term Stability	$\Delta V_{OUT}/\Delta t$	1			-	49	-	mV/ 1.0kHrs
Ripple Rejection Ratio	RR	2	f=120Hz, 25V≦V_{IN}≦35V, T_j=25℃		31	37	-	dB
Dropout Voltage	$\lvert V_{IN}-V_{OUT} \rvert$	1	T_j=25℃		-	1.7	-	V
Average Temperature Coefficient of Output Voltage	TC_{VO}	1	I_{OUT}=5mA		-	-1.7	-	mV/℃

ELECTRICAL CHARACTERISTICS
KIA78S24P
(Unless otherwise specified, V_{IN}=33V, I_{OUT}=40mA, C_{IN}=0.33μF, C_{OUT}=0.1μF, 0℃≦T_j≦125℃)

CHARACTERISTIC	SYMBOL	TEST CIRCUIT	TEST CONDITION		MIN.	TYP.	MAX.	UNIT
Output Voltage	V_{OUT}	1	T_j=25℃		23	24	25	V
Input Regulation	Reg line	1	T_j=25℃	27.5V≦V_{IN}≦38V	-	35	350	mV
				28V≦V_{IN}≦38V	-	30	300	
Load Regulation	Reg load	1	T_j=25℃	1.0mA≦I_{OUT}≦100mA	-	40	200	mV
				1.0mA≦I_{OUT}≦40mA	-	20	100	
Output Voltage	V_{OUT}	1	27.5V≦V_{IN}≦38V 1.0mA≦I_{OUT}≦40mA		22.8	-	25.2	V
			V_{IN}=33V, 1.0mA≦I_{OUT}≦70mA		22.8	-	25.2	
Quiescent Current	I_B	1	T_j=25℃		-	3.5	6.5	mA
			T_j=125℃		-	-	6.0	
Quiescent Current Change	ΔI_B	1	28V≦V_{IN}≦38V		-	-	1.5	mA
			1.0mA≦I_{OUT}≦40mA		-	-	0.1	
Output Noise Voltage	V_{NO}	1	Ta=25℃, 10Hz≦f≦100kHz		-	200	-	μV_{rms}
Long Term Stability	$\Delta V_{OUT}/\Delta t$	1			-	56	-	mV/1.0kHrs
Ripple Rejection Ratio	RR	2	f=120Hz, 29V≦V_{IN}≦39V, T_j=25℃		31	35	-	dB
Dropout Voltage	$\lvert V_{IN}-V_{OUT} \rvert$	1	T_j=25℃		-	1.7	-	V
Average Temperature Coefficient of Output Voltage	TC_{VO}	1	I_{OUT}=5mA		-	-2.0	-	mV/℃

TEST CIRCUIT/STANDARD APPLICATION CIRCUIT

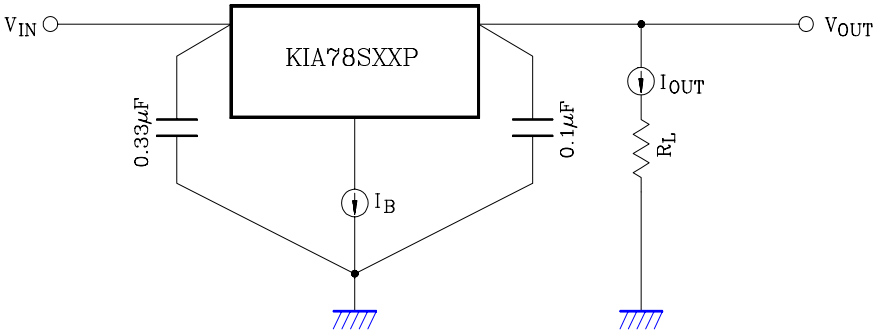

TEST CIRCUIT

1. V_{OUT} , R_{eg} · line , R_{eg} · load , V_{OUT} , I_B , ΔI_B , V_{NO} , ΔV_{OUT} /Δt , $|V_{IN} - V_{OUT}|$, TC_{VO}

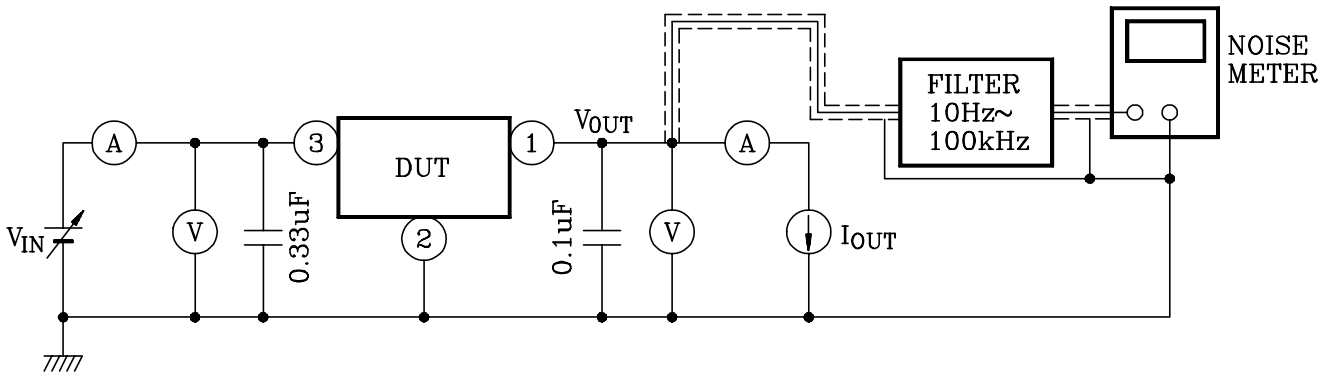

2. RR

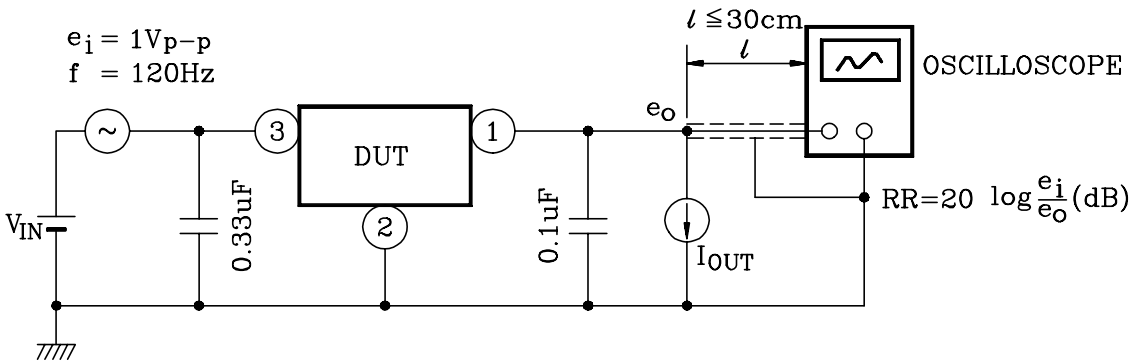

APPLICATION CIRCUIT

(1) STANDARD APPLICATION

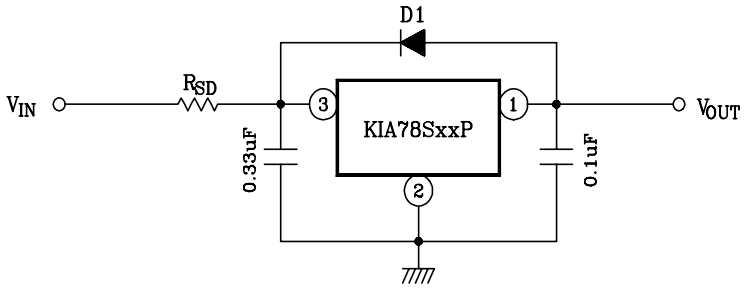

D1 : Protection Diode
High speed diode D1 should be connected as shown in the figure if the condition $V_{IN} < V_{OUT}$ might occur by surge voltage or power supply ON/OFF.

R_{SD} : Power limiting resistor
for large V_{IN} , resistor R_{SD} is needed to limit IC power dissipation.

(2) A. CURRENT BOOST VOLTAGE REGULATOR

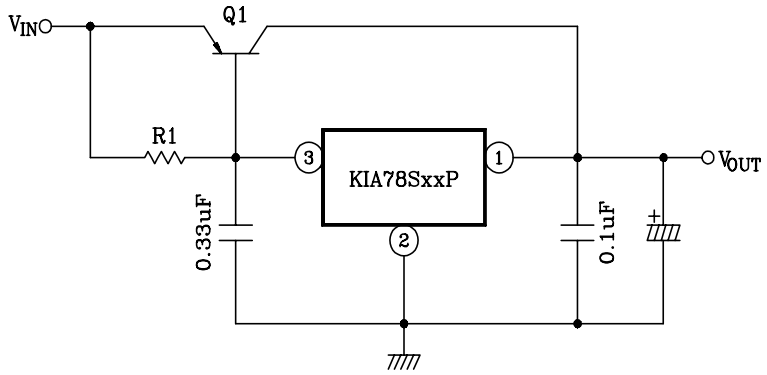

Heat sink is needed for Q1

$$R1 \leq \frac{V_{BE1}}{I_{B(MAX)}}$$

where, V_{BE1} : V_{BE} of external transistor Q1

$I_{B(MAX)}$: Quiescent current of IC

B. SHORT-CIRCUIT PROTECTION

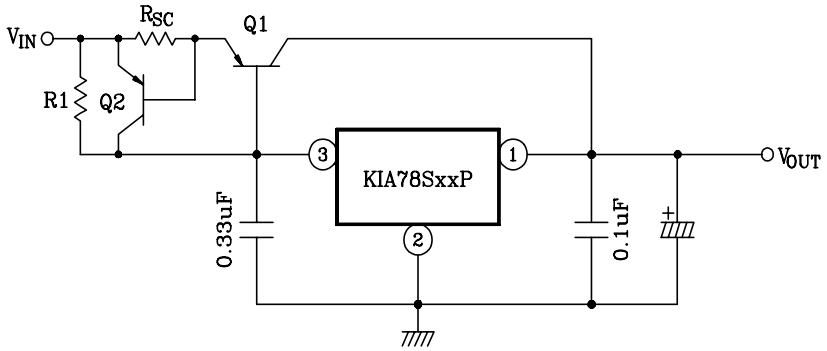

$$R_{SC} = \frac{V_{BE2}}{I_{SC}}$$

where, I_{SC} : Short-Circuit current

(3) CURRENT REGULATOR

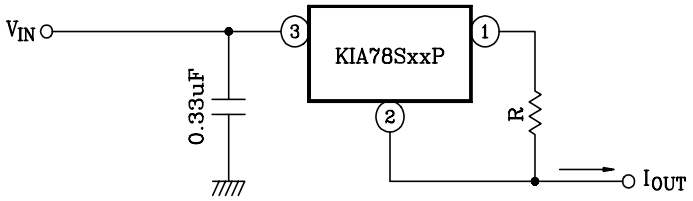

$$I_{OUT} = \frac{V_{OUT}}{R} + I_B$$

(4) VOLTAGE BOOST REGULATOR

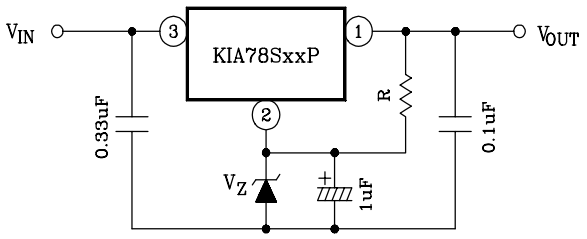

$V_{OUT} = V_Z + V_{OUT}$ (of IC)
A little of current in resistor R is needed.

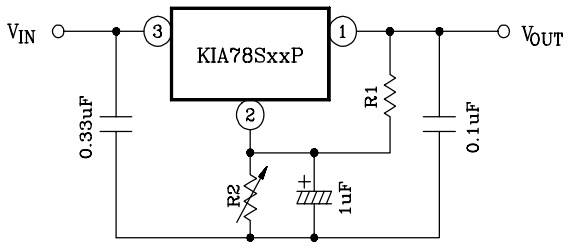

$$V_{OUT} = R2\left(I_B + \frac{V_{OUT}\text{ (of IC)}}{R1}\right) + V_{OUT}\text{ (of IC)}$$

(5) NEGATIVE REGULATOR

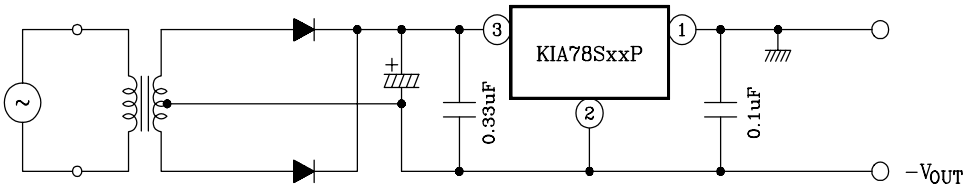

(6) POSITIVE AND NEGATIVE REGULATOR

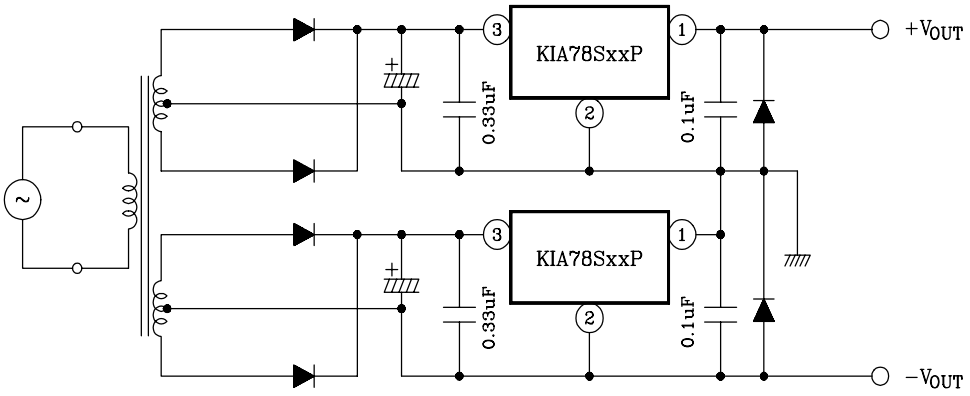

PRECAUTIONS FOR USE

When such a high voltage as exceeds 10V beyond the fixed output voltage (Typ.Value) of IC is applied to the output terminal of IC, the IC may be destroyed. In such a case, it is advised to prevent an excessive voltage from being applied to the IC by connecting a zener diode between the output terminal and the GND. Especially, in the current boost circuit as shown in example (2) of application circuits, an input voltage may be suddenly applied to the output terminal of IC in the form of steps, and that in case of light load, an excessive voltage may be transiently applied to the output terminal of IC: So that great care should be taken to this matter. In this case, in addition to the above, it may become necessary to consider such a countermeasure as the output capacitor in use is replaced with a capacitor of larger capacitance, or as R1 (a resistor for IC bias current) or bypass is replaced with a resistor of smaller resistance according to circumstances, or as the input voltage is gradually raised.

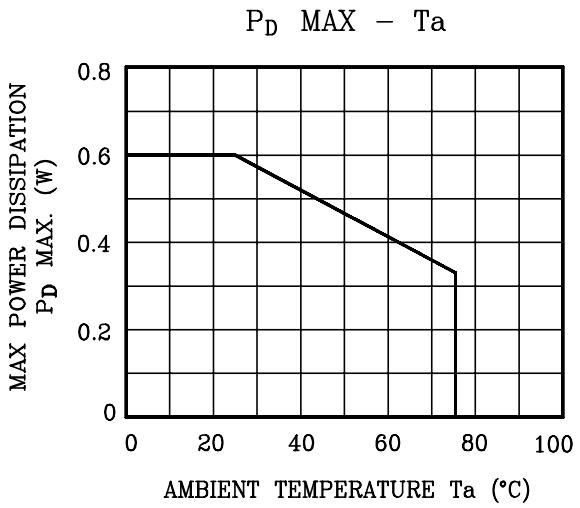
PD MAX – Ta
MAX POWER DISSIPATION PD MAX. (W)
0.8
0.6
0.4
0.2
0
0
20
40
60
80
100
AMBIENT TEMPERATURE Ta (°C)

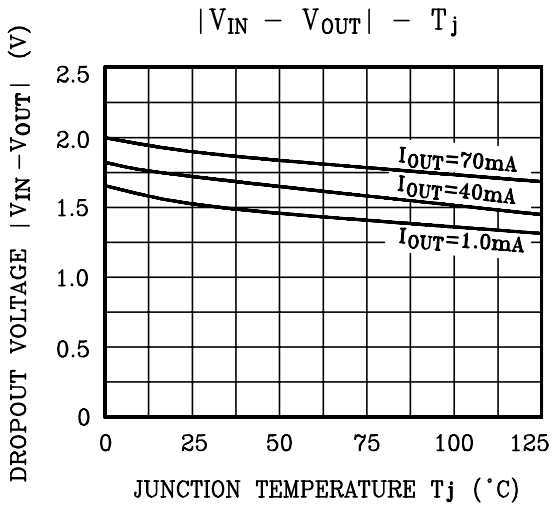
|VIN – VOUT| – Tj
DROPOUT VOLTAGE |VIN –VOUT| (V)
2.5
2.0
1.5
1.0
0.5
0
IOUT=70mA
IOUT=40mA
IOUT=1.0mA
0
25
50
75
100
125
JUNCTION TEMPERATURE Tj (˚C)

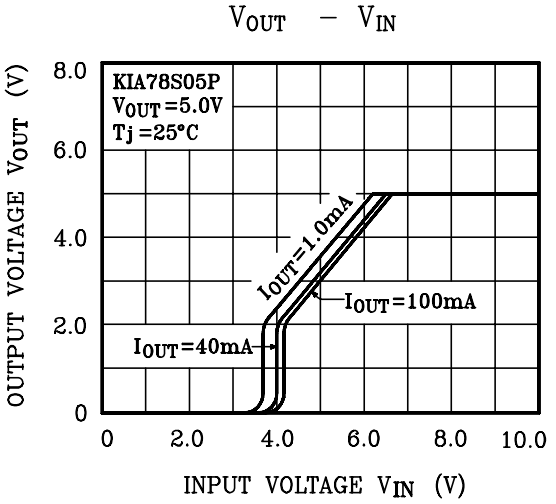
VOUT – VIN
KIA78S05P
VOUT=5.0V
Tj=25°C
OUTPUT VOLTAGE VOUT (V)
8.0
6.0
4.0
2.0
0
IOUT=1.0mA
IOUT=100mA
IOUT=40mA
0
2.0
4.0
6.0
8.0
10.0
INPUT VOLTAGE VIN (V)

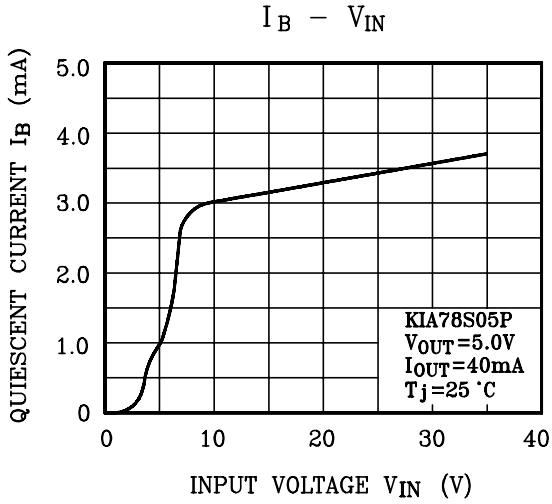
IB – VIN
QUIESCENT CURRENT IB (mA)
5.0
4.0
3.0
2.0
1.0
0
KIA78S05P
VOUT=5.0V
IOUT=40mA
Tj=25 ˚C
0
10
20
30
40
INPUT VOLTAGE VIN (V)

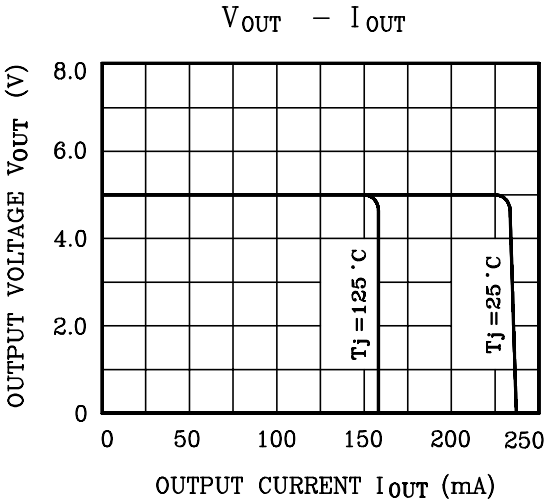
VOUT – IOUT
OUTPUT VOLTAGE VOUT (V)
8.0
6.0
4.0
2.0
0
Tj=125 ˚C
Tj=25 ˚C
0
50
100
150
200
250
OUTPUT CURRENT IOUT (mA)