PCI based chip CH365

ISA Evaluation board usage

（The second version）

Nanjing Qinheng Electronics Co., Ltd.
www.winchiphead.com

1. Introduction

The evaluation board of CH365 is composed of one CH365 chip and two 16V8 programmable devices. The upper of evaluation provides one 8-bit ISA slot. The lower of evaluation board can insert to PCI slot in computer, and the upper ISA slot can insert to I/O board of former ISA bus, so the former ISA board can transplant to PCI bus. In addition, the evaluation board can test the function that CH365 can self-define ID of PCI board.

2. The principle image

The following is the first version principle image, and there is some change in the second version. Add one 40-pin double lines neilsbed. The second version principle image can consult EVTSCH.PDF, and the PCB can consult EVTPCB.PDF.

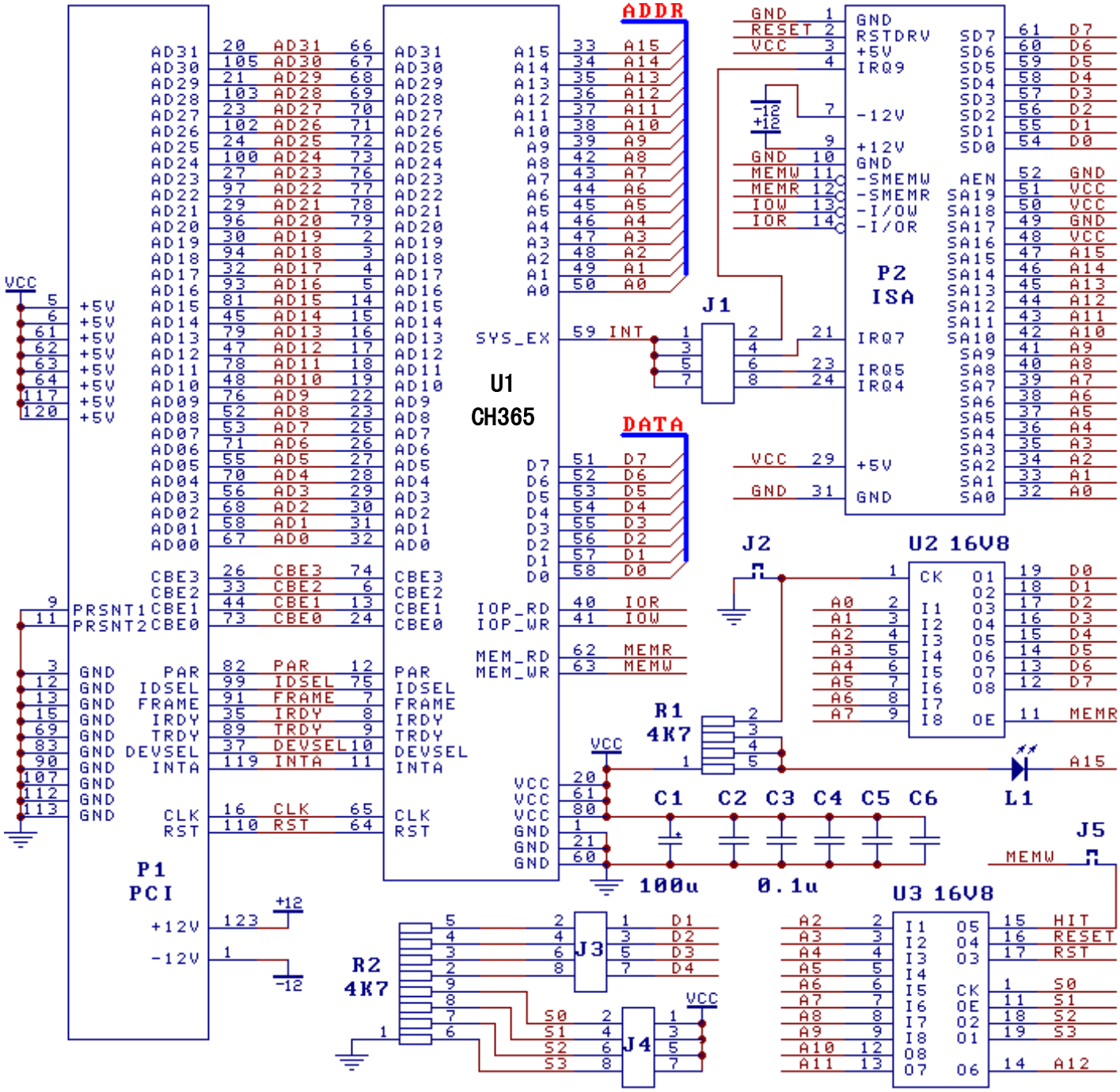

3. Device explanation

P1 is PCI bus, directly insert to PCI slot in computer.

P2 is 8-bit ISA slot, insert the former ISA board, with CH365 to convert ISA to PCI, and the PC can test the former ISA board's function via PCI bus.

U1 (CH365) and PCI bus adapts standard connection. If the interrupt service is not necessary, INTA can not connect. The +12V and -12V power needed by ISA slot can be supplied by PCI bus.

CH365 only supports one interrupt query. The J1 is used to connect IRQ5 interrupt pin of ISA bus, but it doesn't totally compatible. Notice: the interrupt query input SYS_EX pin in CH365 actives with low-level.

J3 is used to pull-down D1-D4 data wires, so it can set work mode of CH365. For example, the 1-pin connects with 2-pin in J3, force Ch365 to use external ID.

U2 (16V8 programmable device) is optional device, used to customize ID of PCI board. If the work mode of CH365 is set as external ID, self-define PCI-ID in U2, contains Vendor ID, Device ID etc.U2 has two PCI-ID, decided by J2: when J2 is cut, Vendor ID and Subsystem Vendor ID is 4348H, Device ID and Subsystem ID is 5049H, and there is an information of finding a new hardware in Windows OS; when J2 is short circuit, Vendor ID is 0000H, Windows OS ignores it same as ISA card, and there is no information about finding a new hardware. If CH365 doesn't set the external ID, use the default ID, and U2 can be gotten out of the board.

L1 is used to display state of A15 address wire, and the state of A15 can be controlled by PC, when A15 is 0, turn on L1.

When doesn't test the former ISA board, the U3 (16V8 programmable device) is optional device. The PCI bus reset signal actives with low-level, so U3 provides high-level active reset signal for ISA card. U3 is mainly used for local hardware fix address, J5 is used to connect the two level address encode output in U3 to local hardware fix address request input of CH365, if the function of local hardware fix address is not needed, the J5 must cut down.. I/O address fix by U3 is determined by J4, and U3 has 8 groups I/O addresses. If the I/O address of former ISA board isn't in the scope, modifies programmable data in U3, so CH365 fix to appointed I/O address. When S3-S0 in U3 is 0000B, address of I/O is 240H-24FH; when S3-S0 is 0001B (S0=1), the address is 250H-25FH; according these sequence, when S3-S0 is 0111B (S3=1), the address is 2B0H-2BFH.

The first version PCB:

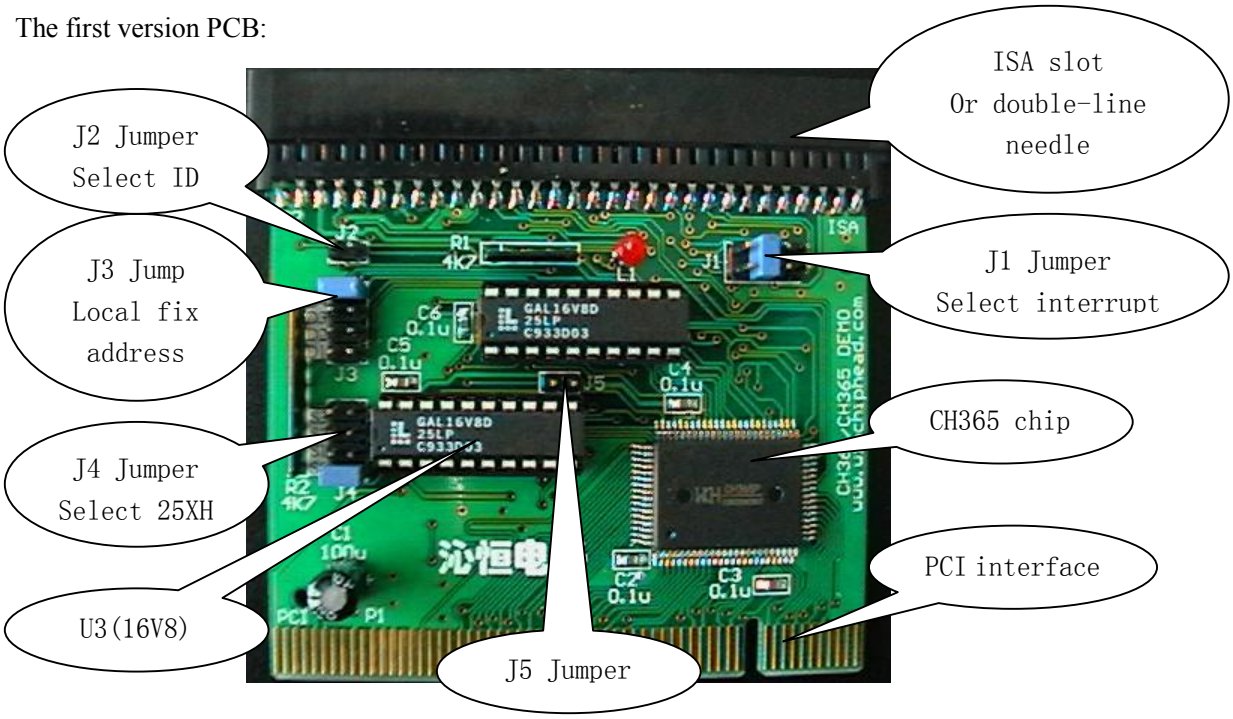

J1 from left to right: IRQ9/7/5/4, J3 from top to below:D4/3/2/1, J4 from top to below:S3/2/1/0.

4. Test the former ISA board

If don't use interrupt function, must cut down J1; the 7-pin and 8-pin in J3 must be short circuit, so the D4 of CH365 is pulled down, and the local hardware fix address function is started. Select fix address scope of U3 via J4. If the I/O address of former ISA board is 25XH, the 1-pin and 2-pin in J4 must be short circuit, so the second layer address decode of U3 can output to CH365.

Insert the former ISA board to ISA slot in the evaluation board, and then insert the evaluation board to PCI slot in computer, using the application program in former ISA board to test.

4.1. The former ISA board uses I/O

With the local hardware fix address function in CH365, the evaluation board can realize ISA upgrade to PCI directly, the programmable device U3 in the board is used to the second address encode, I/O address occupied by PCI board can be chose by U3.

The target data of U3 is CH365HIT.JED. For the I/O address which is not supplied by U3, consult CH365HIT.PLD to modify data in 16V8. In actually, Ch361HIT decode the A12-A4, the A9-A4 is decoded by CH365HIT, in the circuit, U3 maybe connect with A12-A10 but they are not used.

If the I/O address of former ISA board is 24XH, 25XH, 26XH, 27XH, 28XH, 29XH, 2AXH or 2BXH, uses the file CH365HIT in IOP_HIT\ADDR_2XX subdirectory. If the I/O address of former ISA board is 30XH, 31XH, 32XH, 33XH, 34XH, 35XH, 36XH or 2EXH, uses the file CH365HIT in IOP_HIT\ADDR_3XX subdirectory. The default data in U3 is CH365HIT.JED in IOP_HIT\ADDR_2XX. If needs other address, consults PLD to modify it, or use JED data in IOP_HITX directory. For example, file ADDR1EX.JED is used to I/O fix address 1E0H-1EFH.

The target data CH361HIT.JED of former CH361 evaluation board can also be used. But local hardware fix address function of CH361 desires the second decode of A12-A0, and A14-A0 will change with PCI bus address. While local hardware fix address function of CH365 desires the second decode of A9-A0, and A9-A0 will change with PCI bus address. A15-A10 can keep the former state, so they can be as output signal to control other circuit, such as control LEDs etc.

If starts local hardware fix address function, the I/O of ISA can upgrade to PCI, and no need to modify any application program. If the local hardware fix address doesn't start, the U3 can get out of the evaluation, but need to modify I/O address in application program, modify the stable I/O address in former ISA to auto assigned address in PCI.

4.2. The former ISA board uses storage resource

Upgrade the ISA storage to PCI, usually needs to modify storage address in application program, modify the stable MEM address of former ISA to PCI auto assigned address.

If the demand is not rigorous and only considering test, the application program is not need to modify, but need another board-memory address setting board. This board is composed of one CH36X chip and one ROM chip. The memory base address is set to segment address D000H or D800H by program in ROM, so it is match with the memory address in ISA board, and the memory address in application program is no need to modify.

Memory address setting board has one jumper, when the jumper is short, this board can set evaluation MEM base address as 000D0000H, corresponding to D000H segment address in ISA; when jumper is cut down, the MEM base address of this evaluation is set as 000D8000H, corresponding to D800H segment address in ISA.

In DOS system, don't use memory source before starting DOS or during starting DOS period, the function of memory address setting board can completed by software, the method is : after starting DOS (load in AUTOEXEC), execute CH365MEM.EXE, this program will set memory base address in CH365. The command parameter is "CH365MEM D000" or "CH365MEM D800".

4.3. The former ISA board uses interrupt source

For ISA interrupt convert to PCI interrupt, consult CH365INT.PDF.

5. Test self-define PCI-ID

The 1-pin and 2-pin in J3 must be short, pull-down D1 in CH365, so force CH365 to use external ID; the J2 is used to select two groups ID in U2. The target data in U2 is PCI_ID\CH365ID.JED. When need to self-define ID in PCI board, consult CH365ID.PLD to modify data in 16V8.

6. Test other functions

If lined from ISA slot, or lined signal wire from the second version double needle P3, it can test other PCI application which has no relation ship ISA. For example, PCI interface board which is new designed.

In the second version PCB, U4 can use to test I/O output function, the output data from I/O in CH365 will be stored in register U4, then drive four LEDs to display D3-D0 state when I/O output.

7. Software interface

In DOS_SW subdirectory, there are DOS interface library and DOS application example of CH365. CH365DOS.C is C language source program of DOS interface library. CH365CKD.C is C language source program of DOS application program. We can provide WDM driver program and C language source program of DLL in Windows OS for customer who order batch products.

8. Additional information

Read/write I/O or memory with word or double word as unit, the read/write pulse space is 30nS in default, while the speed of many I/O devices and double port RAM can not up to 30nS. For the double port RAM which speed is slower than 30nS, set the read/write speed control register of CH365, and the 12H is recommended.

CH365 is the upgrade of CH361, and their pins are compatible, the all application information contain WDM driver program and DLL can directly used to CH365. Certainly, for CH365, use its driver program WDM and DLL is better. Compared with CH361, CH365 gets out of IOP_WAIT, add the support for interrupt, and the data transfer speed has enhanced. If the read/write pulse width is set as 30nS, and take four words as unit, the real data transfer speed is 7M byte/s, the speed is three times of CH361. CH365 also supports get data in advance of memory, with the cooperate of operation system and drive, the data storage speed can up to 14M bytes.

9. Other information

CH365ISA.PDF is about ISA upgrade to PCI, and the circuit about PCI.

CH365INT.PDF is about interrupt application.

CH365PCB.PDF is about the design detail rules of PCI board PCB.

OTHER\CH365M4B.PDF is about MCU exchange data with computer via four parallels.

OTHER\CH365SPI.PDF is about application program control CH365 to simulate SPI or MicroWire interface.

OTHER\CH365DBG.PDF is about PC troubleshooting board (PostCard) when design PCI.

DEBUG365 directory is one debug tool of CH365 in WINDOWS.

DOS_SW directory is interface subprogram in DOS.

MEM directory contains expansion ROM of memory address set board and set memory address tool program in DOS.

VB directory contains VB program application program example.

CBUILD directory contains BC program application program example.