TOSHIBA BIPOLAR LINEAR INTEGRATED CIRCUIT SILICON MONOLITHIC

TA7900S

5V VOLTAGE REGULATOR WITH WATCHDOG TIMER

The TA7900S is an IC specially designed for micro-computer systems. It produces an output voltage of 5 ± 0.25V without need for adjustment from its accurate reference voltage and amplifier circuit.
At power-on, it outputs a reset signal to reset the system. It will also output a reset signal when the 5V output voltage drops below 92% because of external disturbance or other problem. It also incorporates a watchdog timer for self-diagnosing the system. When the system malfunctions, the IC generates reset pulses intermittently to prevent the system from running away.

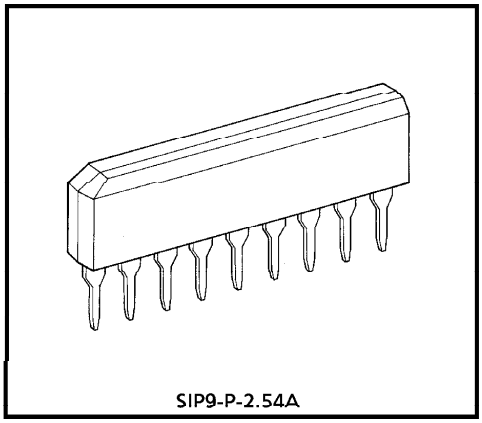

Weight : 0.92g (Typ.)

FEATURES

- Accurate output : 5 ± 0.25V
- Output voltage adjusting pin attached
- Power-on reset timer incorporated
- Watchdog timer incorporated
- Operating temperature range : from −40 to 85°C
- Wide operating voltage range : 40V (max.)
- Small SIP-9 pin

BLOCK DIAGRAM AND PIN LAYOUT

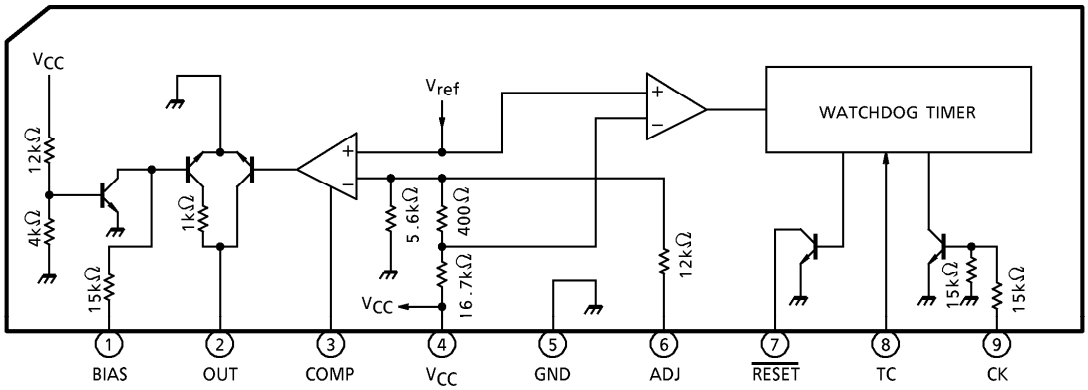

961001EBA2

- TOSHIBA is continually working to improve the quality and the reliability of its products. Nevertheless, semiconductor devices in general can malfunction or fail due to their inherent electrical sensitivity and vulnerability to physical stress. It is the responsibility of the buyer, when utilizing TOSHIBA products, to observe standards of safety, and to avoid situations in which a malfunction or failure of a TOSHIBA product could cause loss of human life, bodily injury or damage to property. In developing your designs, please ensure that TOSHIBA products are used within specified operating ranges as set forth in the most recent products specifications. Also, please keep in mind the precautions and conditions set forth in the TOSHIBA Semiconductor Reliability Handbook.
- The products described in this document are subject to foreign exchange and foreign trade control laws.
- The information contained herein is presented only as a guide for the applications of our products. No responsibility is assumed by TOSHIBA CORPORATION for any infringements of intellectual property or other rights of the third parties which may result from its use. No license is granted by implication or otherwise under any intellectual property or other rights of TOSHIBA CORPORATION or others.
- The information contained herein is subject to change without notice.

PIN DESCRIPTION

PIN No.	SYMBOL	DESCRIPTION
1	BIAS	Power supply starting pin. The starting current is supplied through a resistor to which the input voltage is applied. The output current from this starting current is as follows : I_{OUT} (pin 1) $\geqq 30 \times (V_{IN} - 0.7) / (15 + R_1)$ (mA) where R_1 is the external resistance attached to pin 1 (kΩ). When V_{CC} rises above 2.7V, the starting current is absorbed in the internal circuit ; instead, I_{OUT} is supplied via V_{CC}.
2	OUT	Connected to the base of an external PNP transistor so that the output voltage is stabilized. Power supply design suitable for particular load capacities is thus possible. Since the recommended maximum I_{OUT} is 5mA, an output current of 300mA is assured if the external transistor has an H_{FE} of 60 or more.
3	COMP	Phase compensation pin for output stabilization
4	V_{CC}	Power supply pin for internal circuit. The output voltage can also be detected at this pin.
5	GND	Grounded
6	ADJ	Output voltage adjusting pin. The voltage will increase when a resistor is inserted between ADJ and GND. It will reduce when a resistor is inserted between ADJ and V_{CC}. The maximum variable range is ±1V.
7	$\overline{\text{RESET}}$	NPN transistor open-collector output. (1) The signal goes low when the output drops below 92% of the specified level. (2) The pin supplies a reset signal determined by the CR combination connected to the TC pin. (3) The pin supplies reset pulses intermittently if no clock is given to the CK pin. This function is useful when the IC is used as a watchdog timer for a microcomputer system.
8	TC	Time setting pin for the reset and watchdog timers
9	CK	Input pin for watchdog timer. The pin is pulled up to V_{CC} if the IC is used only as a power-on reset timer.

TIMING CHART

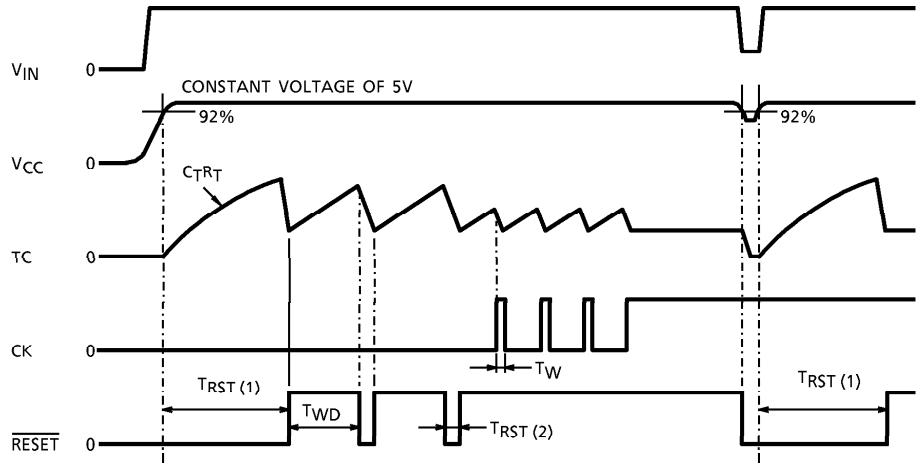

MAXIMUM RATINGS (Ta = 25°C)

CHARACTERISTIC	SYMBOL	RATING	UNIT
Input Voltage	V_{IN1}	40	V
	V_{IN2}	− 0.3 to + 16	
Output Current	I_{OUT1}	10	mA
	I_{OUT2}	4	
Output Voltage	V_{OUT1}	40	V
	V_{OUT2}	16	
Power Dissipation	P_D	500	mW
Operating Temperature	T_{opr}	− 40 to 85	°C
Storage Temperature	T_{stg}	− 55 to 150	°C
Lead Temperature-time	T_{sol}	260 (10s)	°C

V_{IN1} : BIAS input
V_{IN2} : CK input
I_{OUT1}, V_{OUT1} : OUT output
I_{OUT2}, V_{OUT2} : $\overline{RESET}$ output

ELECTRICAL CHARACTERISTICS (V_{IN} = 7 to 17V, Ta = −40 to 85°C)

CHARACTERISTIC	SYMBOL	PIN	TEST CIR-CUIT	TEST CONDITION	MIN.	TYP.	MAX.	UNIT
Output Voltage	V_{REG}	V_{CC}	1	—	4.75	5.0	5.25	V
Line Regulation	—	V_{CC}	—	V_{IN} = 7 to 40V	—	0.1	0.5	%
Load Regulation	—	V_{CC}	—	I_{LOAD} = 1 to 50mA	—	0.1	0.5	%
Temperature Coefficient	—	V_{CC}	—	—	—	0.01	—	% / °C
Output Voltage	V_{OL}	$\overline{RESET}$	2	I_{OL} = 2mA	—	—	0.5	V
Output Leakage Current	I_{LEAK}	$\overline{RESET}$	3	V_{OUT} = 10V	—	—	5	μA
Input Current	I_{IN}	TC	4	V_{IN} = 0 to 3.5V	−3	—	3	μA
Threshold Voltage	V_{IH}	TC	5	$\overline{RESET}$ "High" to "Low"	—	80% × V_{REG}	—	V
	V_{IL}			$\overline{RESET}$ "Low" to "High"	—	40% × V_{REG}	—	
Input Current	I_{IN}	CK	6	V_{IN} = 5V	—	0.3	0.7	mA
Input Voltage	V_{IH}	CK	5	—	2	—	—	V
	V_{IL}			—	—	—	0.5	
Reset Detect Voltage	—	V_{CC}	—	—	89% × V_{REG}	92% × V_{REG}	95% × V_{REG}	V
Standby Current	I_S	V_{CC}	8	V_{IN} = 14V	—	5	6.5	mA
Watchdog Timer	T_{WD}	$\overline{RESET}$	7	—	0.9 × C_TR_T	1.1 × C_TR_T	1.3 × C_TR_T	—
Reset Timer (1)	$T_{RST\ (1)}$	$\overline{RESET}$	7	—	1.3 × C_TR_T	1.6 × C_TR_T	1.9 × C_TR_T	—
Reset Timer (2)	$T_{RST\ (2)}$	$\overline{RESET}$	7	—	150 × C_T	300 × C_T	600 × C_T	—
Clock Pulse Width	T_W	CK	—	—	3	—	—	μs

Note : Reset timer (1) : Power-on reset time
Reset timer (2) : Watchdog reset time

TEST CIRCUIT

1. V_{REG}

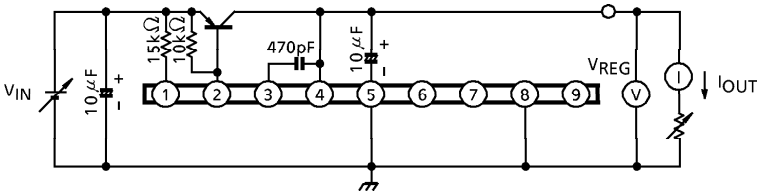

2. V_{OL} ($\overline{RESET}$)

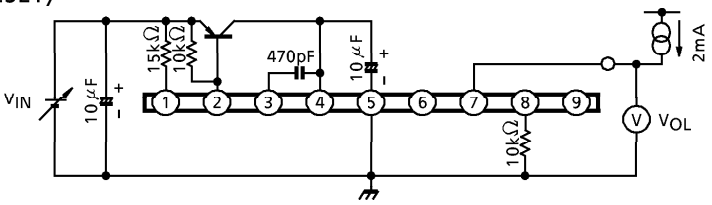

3. I_{LEAK} ($\overline{RESET}$)

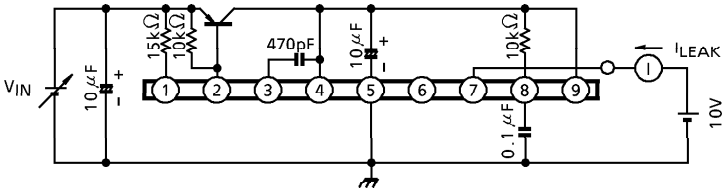

4. I_{IN} (TC)

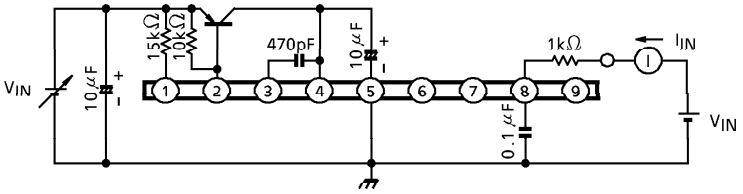

5. V_{IH}, V_{IL} (TC) , V_{IH}, V_{IL} (CK)

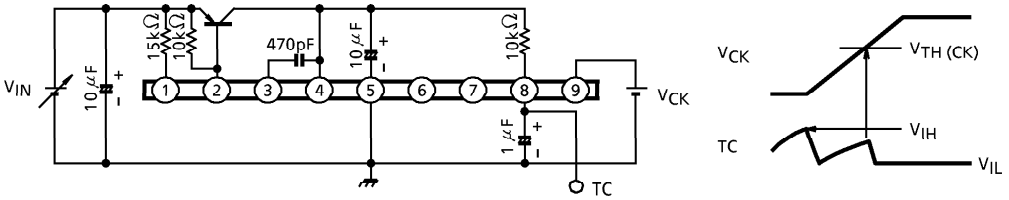

6. I_{IN} (CK)

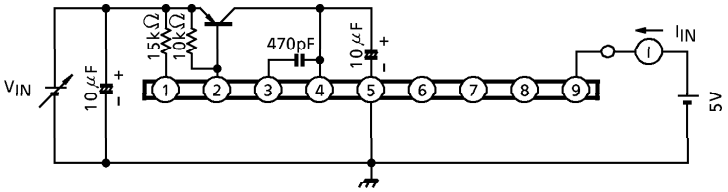

7. V_{RESET}, T_{WD}, T_{RST} (1), T_{RST} (2)

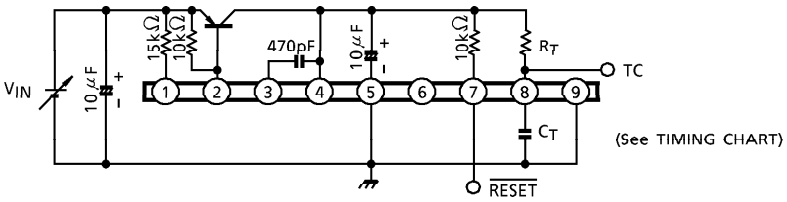

8. I_S

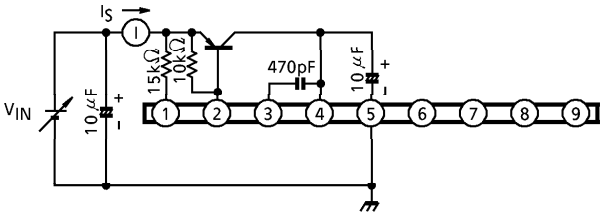

TYPICAL CHARACTERISTICS

1. Input-output characteristic
   ($R_L = 25\Omega$, external transistor 2SA968-Y)

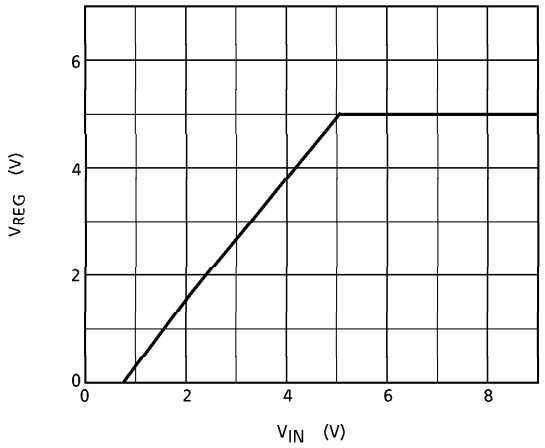

2. Reset Output Characteristic

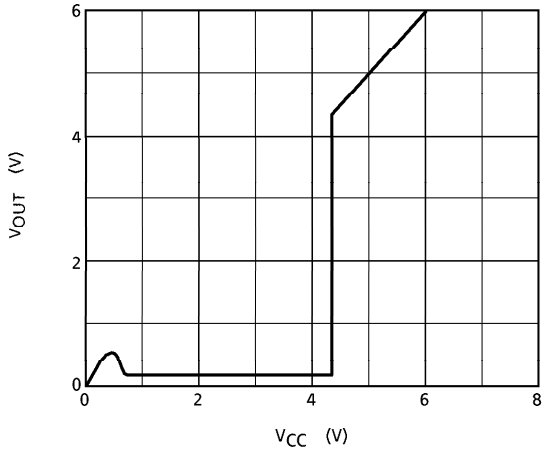

3. Output Adjusting Resistance Characteristic

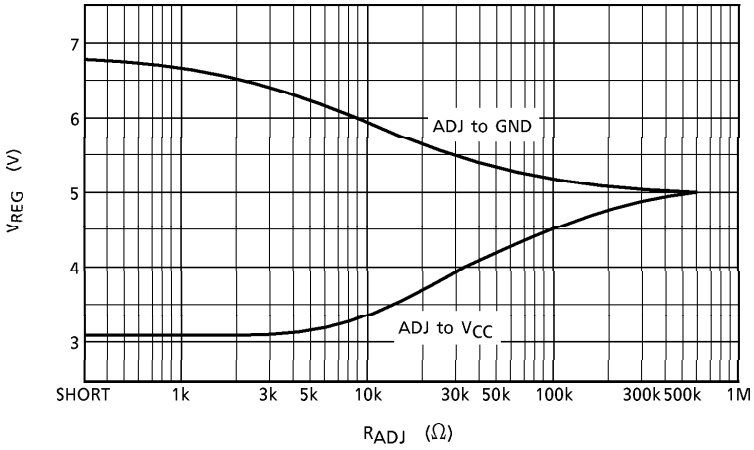

RESET TIMER EQUIVALENT CIRCUIT

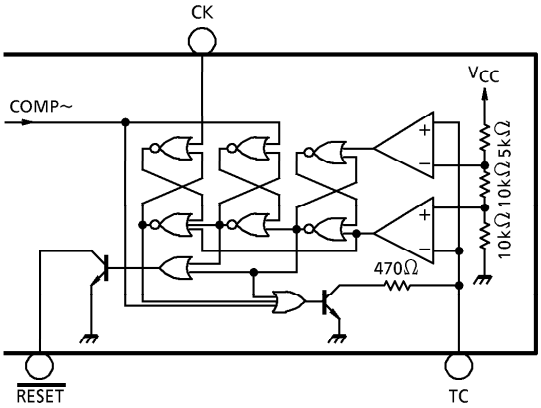

EXAMPLE OF APPLICATION CIRCUIT

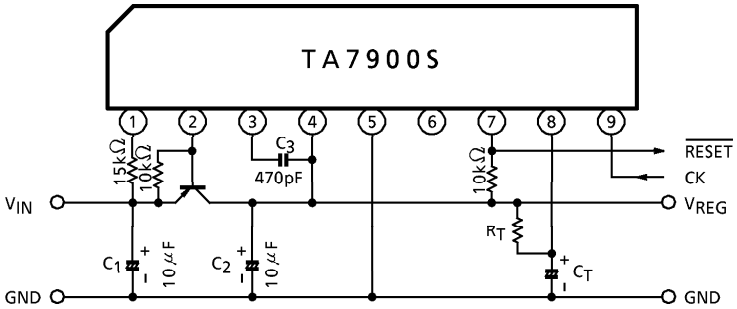

* Cautions for Wiring

1. C_1 and C_2 are for absorbing disturbance, noise, etc. Connect them as close to the IC as possible.
2. C_3 is for phase compensation. Also, connect C_3 close to the IC.

120 Vpeak (200ms) LOAD DUMP

1. Low Output Current Circuit

   I_{LOAD} = 10mA Max., V_{BATT} = 6 to 17V

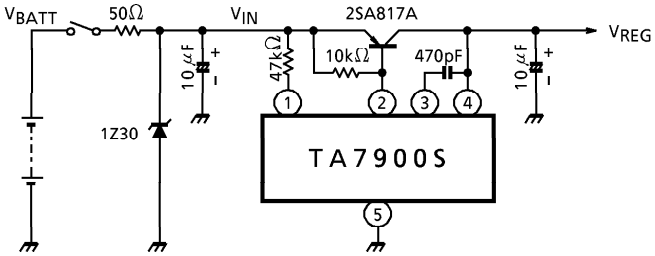

2. High Output Current Circuit
   I_{LOAD} = 300mA Max., V_{BATT} = 6~17V

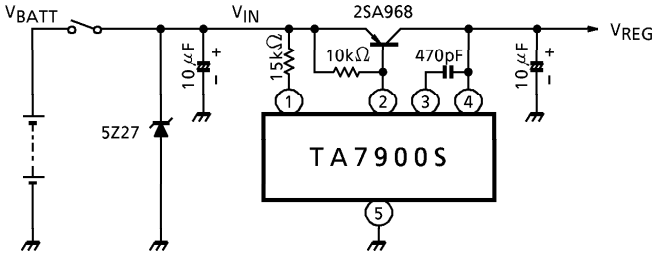

EXAMPLE OF APPLICATION CIRCUIT USING DARLINGTON TRANSISTOR

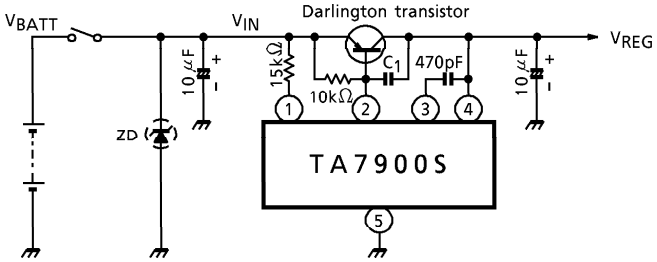

* Select a C_1 value according to the working condition -- typically above 2000pF. Insert ZD when necessary.

APPLICATION CIRCUIT OF WATCHDOG / RESET TIMER

1. $T_{RST\ (1)} \fallingdotseq$ 10ms·····Power-On Reset Timer

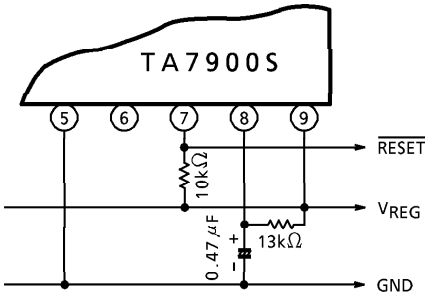

2. $T_{RST\ (1)} \fallingdotseq 1.5T_{WD}$

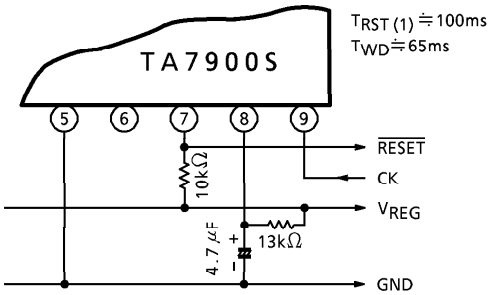

3. $T_{RST\,(1)} \fallingdotseq 100ms$, $T_{WD} \fallingdotseq 300ms$

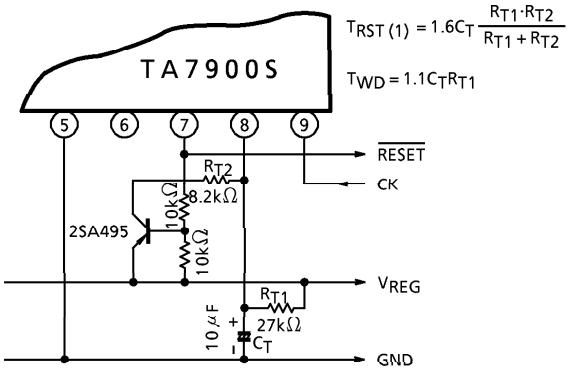

4. Recommended Conditions

PART NAME	MIN.	MAX.	UNIT
C_T	0.01	100	μF
R_T	5	100	kΩ
R_{T1}	—	100	kΩ
$R_{T1} // R_{T2}$ (Note)	5	—	kΩ

(Note) $R_{T1} // R_{T2} = (R_{T1} \times R_{T2}) / (R_{T1} + R_{T2})$

CK INPUT APPLICATION CIRCUIT

○ Capacitor Coupling

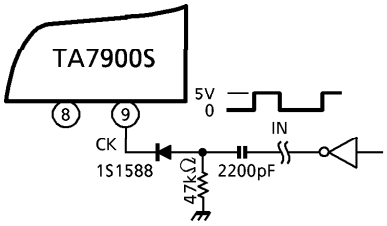

○ Timing Chart

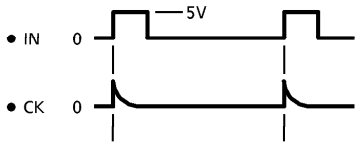

The capacitor coupling allows reset pulses to be supplied intermittently from the $\overline{RESET}$ pin whether the input level (IN) is high or low.

OUTLINE DRAWING

SIP9-P-2.54A

Unit : mm

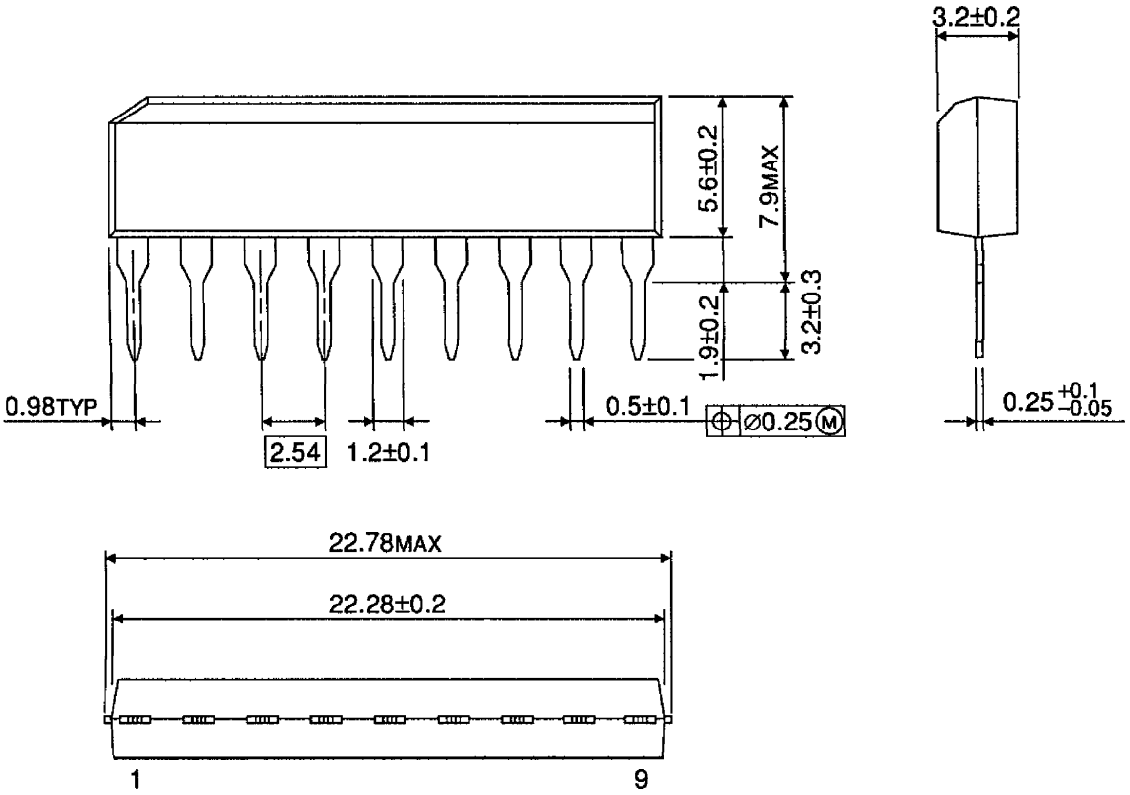

Weight : 0.92g (Typ.)