79G05

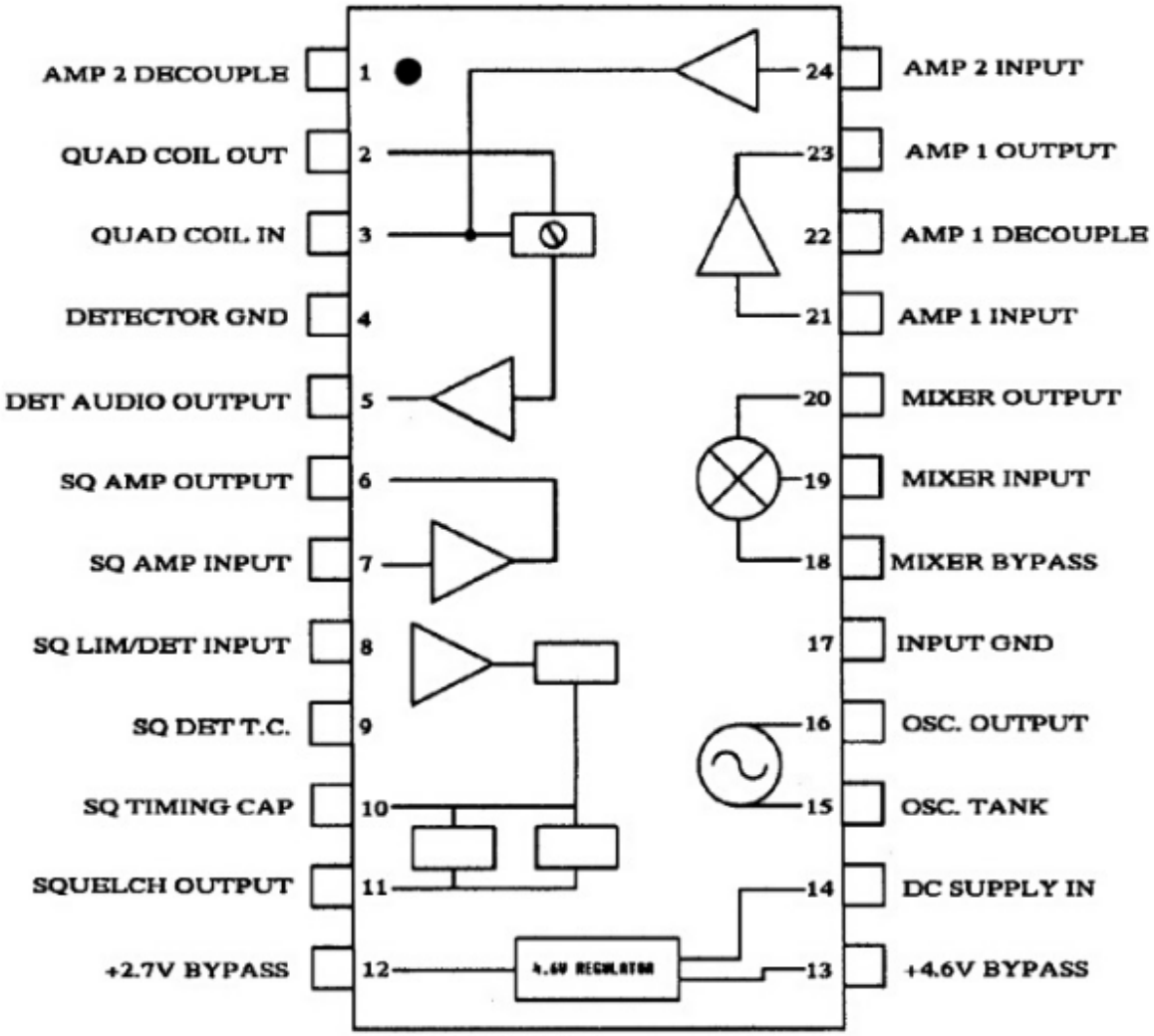
AMP 2 DECOUPLE
1
QUAD COIL OUT
2
QUAD COIL IN
3
DETECTOR GND
4
DET AUDIO OUTPUT
5
SQ AMP OUTPUT
6
SQ AMP INPUT
7
SQ LIM/DET INPUT
8
SQ DET T.C.
9
SQ TIMING CAP
10
SQUELCH OUTPUT
11
+2.7V BYPASS
12
4.6V REGULATOR
24
AMP 2 INPUT
23
AMP 1 OUTPUT
22
AMP 1 DECOUPLE
21
AMP 1 INPUT
20
MIXER OUTPUT
19
MIXER INPUT
18
MIXER BYPASS
17
INPUT GND
16
OSC. OUTPUT
15
OSC. TANK
14
DC SUPPLY IN
13
+4.6V BYPASS

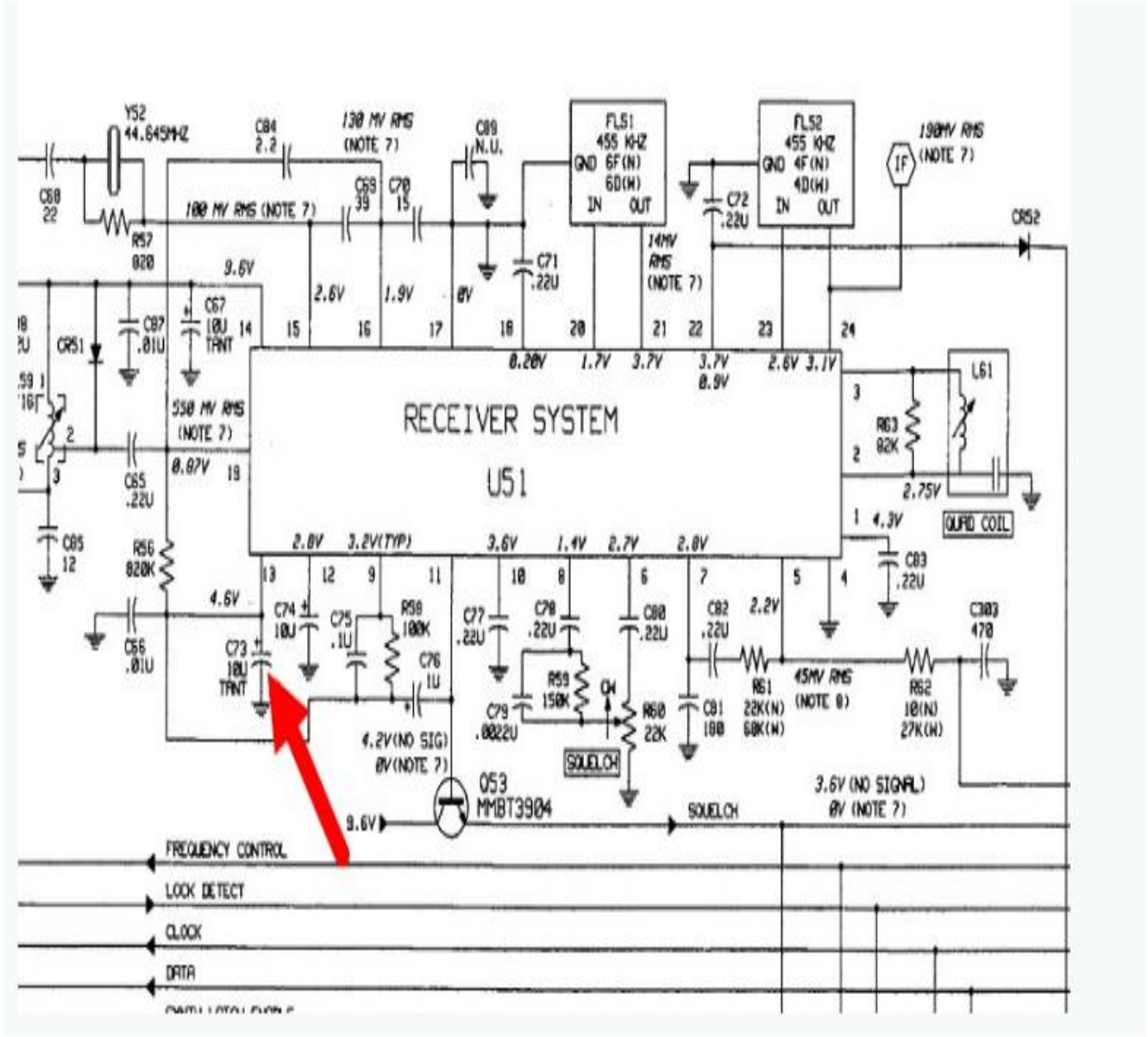
RECEIVER SYSTEM
U51
FL51
455 KHZ
FL52
455 KHZ
IF
LG1
QUAD COIL
SQUELCH
Q53
MMBT3904
FREQUENCY CONTROL
LOCK DETECT
CLOCK
DATA