HD74LS83A • 4-Bit Binary Full Adders (with Fast Carry)

This improved full addrer performs the addition of two 4-bit binary numbers. The sum (Σ) outputs are provided for each bit and the resultant carry (C4) is obtained from the fourth bit. This adder features full internal look ahead across all four bit generating the carry term in ten nanoseconds typically. This provides the system designer with partial look-ahead performance at the economy and reduced package count of a ripple-carry implementation.

■FUNCTION TABLE

Inputs				Outputs: When C0 = L, When C2 = L			When C0 = H, When C2 = L			When C0 = L, When C2 = H			When C0 = H, When C2 = H		
A_1 / A_3	B_1 / B_3	A_2 / A_4	B_2 / B_4	Σ_1 / Σ_3	Σ_2 / Σ_4	C_2 / C_4	Σ_1 / Σ_3	Σ_2 / Σ_4	C_2 / C_4	Σ_1 / Σ_3	Σ_2 / Σ_4	C_2 / C_4	Σ_1 / Σ_3	Σ_2 / Σ_4	C_2 / C_4
L	L	L	L	L	L	L	H	L	L						
H	L	L	L	H	L	L	L	H	L						
L	H	L	L	H	L	L	L	H	L						
H	H	L	L	L	H	L	H	H	L						
L	L	H	L	L	H	L	H	H	L						
H	L	H	L	H	H	L	L	L	H						
L	H	H	L	H	H	L	L	L	H						
H	H	H	L	L	L	H	H	L	H						
L	L	L	H	L	H	L	H	H	L						
H	L	L	H	H	H	L	L	L	H						
L	H	L	H	H	H	L	L	L	H						
H	H	L	H	L	L	H	H	L	H						
L	L	H	H	L	L	H	H	L	H						
H	L	H	H	H	L	H	L	H	H						
L	H	H	H	H	L	H	L	H	H						
H	H	H	H	L	H	H	H	H	H						

H; high level, L; low level, X; irrelevant

Note) Input conditions at A1, B1, A2, B2, and C0 are used to determine outputs Σ1 and Σ2 and the value of the internal carry C2. The value at C2, A3, B3, A4, and B4 are than used to determine outputs Σ3, Σ4 and C4.

■PIN ARRANGEMENT

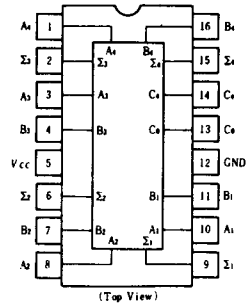

■BLOCK DIAGRAM

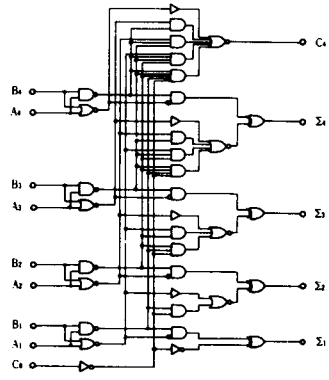

HITACHI
Hitachi America Ltd. • 2210 O'Toole Ave. • San Jose, CA 95131 • (408) 435-8300

This Material Copyrighted By Hitachi America Ltd. Unauthorized Reproduction Prohibited.

■ELECTRICAL CHARACTERISTICS ($Ta = -20 \sim +75°C$)

Item		Symbol	Test Conditions		min	typ*	max	Unit
Input voltage		V_{IH}			2.0	–	–	V
		V_{IL}			–	–	0.8	V
Output voltage		V_{OH}	$V_{CC}=4.75V$, $V_{IH}=2V$, $V_{IL}=0.8V$, $I_{OH}=-400\mu A$		2.7	–	–	V
		V_{OL}	$V_{CC}=4.75V$, $V_{IH}=2V$, $V_{IL}=0.8V$	$I_{OL}=4mA$	–	–	0.4	V
				$I_{OL}=8mA$	–	–	0.5	
Input current	except C0	I_{IH}	$V_{CC}=5.25V$, $V_I=2.7V$		–	–	40	μA
	C0				–	–	20	
	except C0	I_{IL}	$V_{CC}=5.25V$, $V_I=0.4V$		–	–	−0.8	mA
	C0				–	–	−0.4	
	except C0	I_I	$V_{CC}=5.25V$, $V_I=7V$		–	–	0.2	mA
	C0				–	–	0.1	
Short-circuit output current		I_{OS}	$V_{CC}=5.25V$		−20	–	−100	mA
Supply current		I_{CC}	$V_{CC}=5.25V$	All inputs = 0V	–	22	39	mA
				B input = 0.8V, Other inputs4.5V	–	19	34	
				All inputs4.5V	–	19	34	
Input clamp voltage		V_{IK}	$V_{CC}=4.75V$, $I_{IK}=-18mA$		–	–	−1.5	V

* V_{CC}=5V, Ta=25°C

■SWITCHING CHARACTERISTICS ($V_{CC}=5V$, $Ta=25°C$)

Item	Symbol	Inputs	Outputs	Test Conditions	min	typ	max	Unit
Propagation delay time	t_{PLH}	C_0	Σ_i	$C_L=15pF$, $R_L=2k\Omega$	–	16	24	ns
	t_{PHL}				–	15	24	ns
	t_{PLH}	A_i, B_i	Σ_i		–	15	24	ns
	t_{PHL}				–	15	24	ns
	t_{PLH}	C_0	C_4		–	11	17	ns
	t_{PHL}				–	15	22	ns
	t_{PLH}	A_i, B_i	C_4		–	11	17	ns
	t_{PHL}				–	12	17	ns

■TESTING METHOD

1) Test Circuit

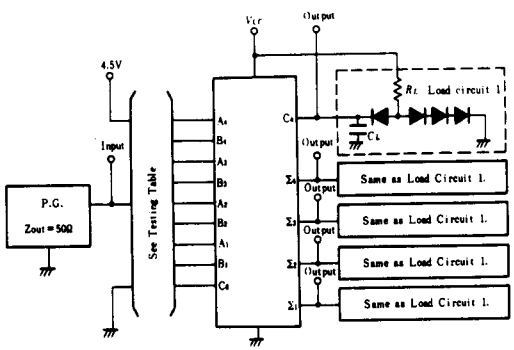

Waveform

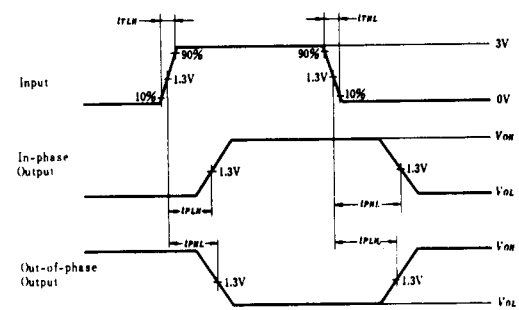

Notes) 1. Input pulse; $t_{TLH} \leq 15ns$, $t_{THL} \leq 6ns$, PRR=1MHz, duty cycle=50%
2. C_L includes probe and jig capacitance.
3. All diodes are 1S2074 ⊕.

This Material Copyrighted By Its Respective Manufacturer
Hitachi America Ltd. • 2210 O'Toole Ave. • San Jose, CA 95131 • (408) 435-8300

2) Testing Table

Item	From input to output	Inputs									Outputs				
		B_4	A_4	B_3	A_3	B_2	A_2	B_1	A_1	C_0	C_4	Σ_4	Σ_3	Σ_2	Σ_1
t_{PLH} t_{PHL}	C_0 →Σ_i or C_4	GND	GND	GND	GND	GND	GND	GND	GND	IN	—	—	—	—	OUT
		GND	4.5V	GND	4.5V	GND	4.5V	GND	4.5V	IN	OUT	OUT	OUT	OUT	OUT
	A_i or B_i →Σ_i or C_4	GND	GND	GND	GND	GND	GND	GND / IN	IN / GND	GND	—	—	—	—	OUT
		GND	GND	GND	GND	GND / IN	IN / GND	GND	GND	GND	—	—	—	OUT	—
		GND	GND	GND / IN	IN / GND	GND	GND	GND	GND	GND	—	—	OUT	—	—
		GND / IN	IN / GND	GND	GND	GND	GND	GND	GND	GND	—	OUT	—	—	—
		GND	GND	GND	GND	GND	GND	4.5V / IN	IN / 4.5V	GND	—	—	—	OUT	OUT
		GND	GND	GND	GND	4.5V / IN	IN / 4.5V	GND	GND	GND	—	—	OUT	OUT	—
		GND	GND	4.5V / IN	IN / 4.5V	GND	GND	GND	GND	GND	—	OUT	OUT	—	—
		4.5V / IN	IN / 4.5V	GND	GND	GND	GND	GND	GND	GND	OUT	OUT	—	—	—

HITACHI
Hitachi America Ltd. • 2210 O'Toole Ave. • San Jose, CA 95131 • (408) 435-8300
This Material Copyrighted By Its Respective Manufacturer

PACKAGING INFORMATIONS

T-90-20

Factory orders for circuits described in this databook should include a three-part type number as explained in the following example.

HD 74LS00 P

- P — Package ; Plastic DIP ; letters P
  Cerdip ; non-letters
- 74LS00 — Circuit description
- HD — Prefix : HD ; Hitachi Digital IC

■Plastic DIP

●14 Pin

DP-14

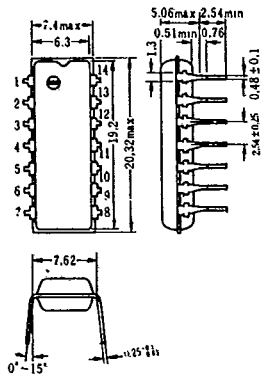

●16 Pin

DP-16

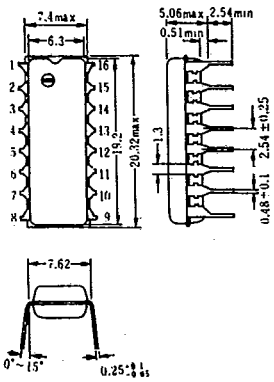

●20 Pin

DP-20

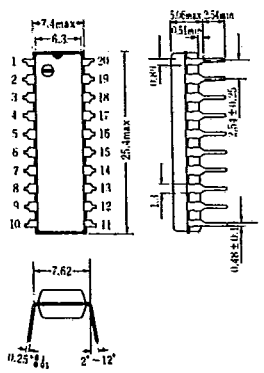

●24 Pin

DP-24

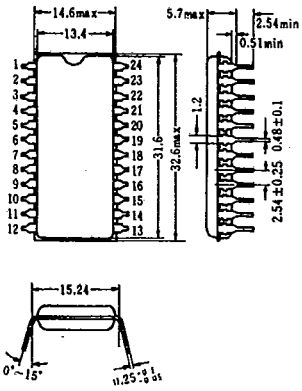

This Material Copyrighted By Its Respective Manufacturers

Hitachi America Ltd. • 2210 O'Toole Ave. • San Jose, CA 95131 • (408) 435-8300

PACKAGING INFORMATIONS

■Cerdip

●14 Pin

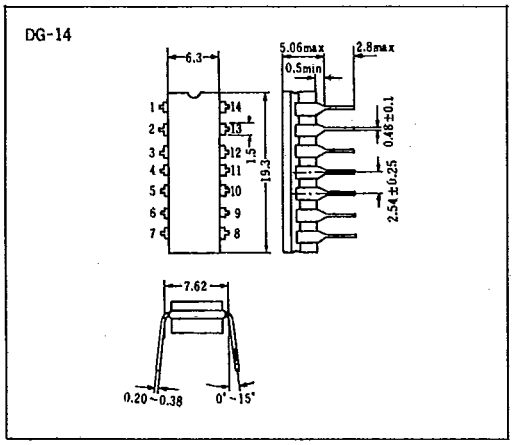

●16 Pin

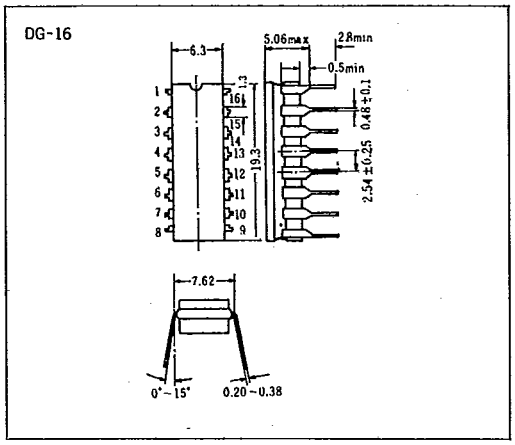

●20 Pin

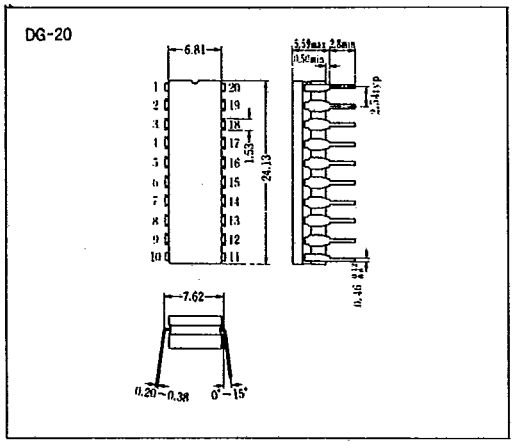

●24 Pin

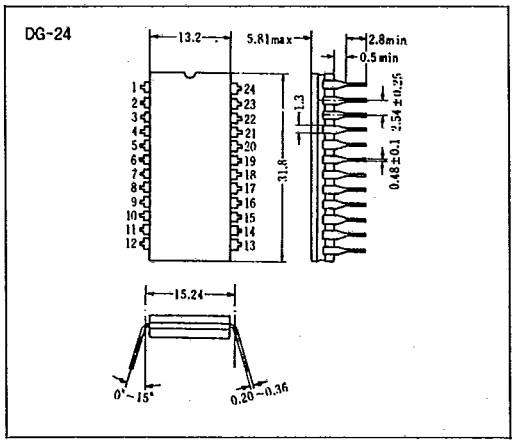

This Material Copyrighted By Its Respective Manufacturer

HITACHI
Hitachi America Ltd. • 2210 O'Toole Ave. • San Jose, CA 95131 • (408) 435-8300