REV.	DESCRIPTION	DRAWN	CHECKED	APPROVED

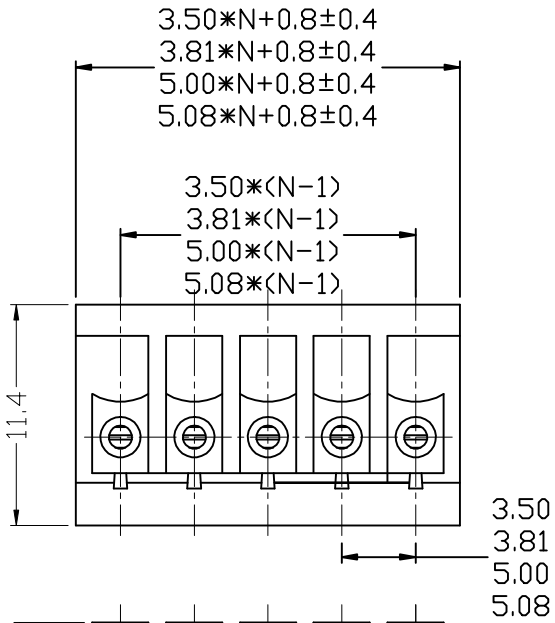

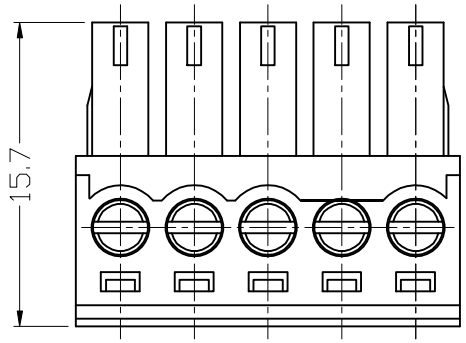

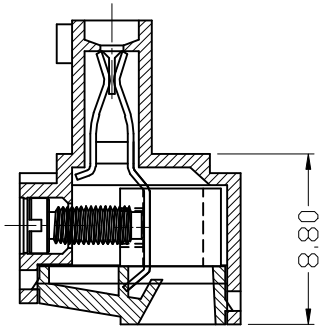

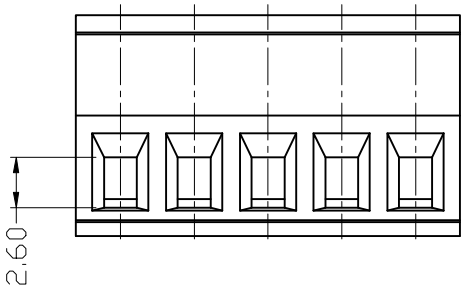

·MATERIAL
CONTACT : PHOSPHOR BRONZE
SCREWS : M2 STEEL ZINC PLATED
HOUSING : PA66, UL94V-0

·ELECTRICAL
RATED VOLTAGD : 300V
RATED CURRENT : 8A
CONTACT RESISTANCE : 20mΩ
INSULATION RESISTANCE : 5000MΩ/1000V
WITHSTANDING VOLTAGE : AC1500V/1Min
WIRE RANGE : 24-14AWG 2.5mm²

·MECHANICAL
TEMP.RANGE : -40℃∽+105℃
MAX SOLDREING : +250℃, FOR 5 SEC.
STRUO LEBGTG : 5-6mm

GENERAL TOLERANCE		ANGLE TOLERANCE	
X.	±0.20	X.	±2°
.X	±0.15	.X	±1°
.XX	±0.10	.XX	±0.5°

DRAWING TYPE	COMPONENTS		
SCALE	1:1	SHEET	1 OF 1
DRAWING NO.			

PROJECTION		TITLE	PLUGGABLE TERMINAL BLOCKS PITCH 3.5/3.81/5.0/5.08mm
UNITS	mm		
SHEET SIZE	A4	SERIES	KF2EDG-Y SERIES

KAIFENG ELECTRONIC

慈溪市凯峰电子有限公司
KAIFENG ELECTRONIC CO.LTD