UVC3100, UVC3101, UVC 3120 High-Speed A/D-D/A-Converters (40-Pin Plastic Package)

VLSI circuits in CI technology, featuring the following circuits:
- a high-speed flash type 8-bit A/D converter
- a high-speed low-glitch 10-bit D/A converter, designed as an R-2R network with switched current sources
- various auxiliary circuits, as reference voltage sources, preamplifier, input clamping circuit, and feed-in output amplifier.

UVC3100 and UVC3101 are different only in the linearity of the D/A converter. In the case of UVC3100, the differential linearity is ±1/2 LSB (referred to 10 bit), and with the UVC 3101 it is ±1/2 LSB (referred to 8 bit).

UVC3100 and UVC3101 have been developed for use in all applications which call for a high-speed A/D-D/A converter. They can be used to decode television signals in Pay-TV converters or for D2-MAC converters used in direct satellite broadcast. Other applications can be seen in industrial electronics, e. g. in conjunction with digital signal processing. Although UVC3100 and UVC3101 were initially designed as high-speed codecs for the video range, they can be used with equal benefits for lower frequencies, even down to zero.

The auxiliary circuits contained on-chip provide versatile potential applications needing a minimum of external components. An impedance converter is connected upstream of the A/D converter to provide a high-impedance signal input, in spite of the high input capacitance of the A/D converter. The reference voltage for the A/D converter is generated on-chip, but both the ground of that circuit and the reference voltage are fed to pins, so that an external filter capacitor may be connected. Further, the input is equipped with switches which optionally provide operation with keyed clamping or peak clamping or without clamping. Also the D/A converter's reference voltage is generated on-chip, and a gated amplifier is arranged at the output of the D/A converter so that an external analog signal can be fed-in instead of the signal delivered by the D/A converter.

Separate clock inputs are provided for the A/D converter and the D/A converter thus enabling the application of time compression procedures. All inputs and outputs are TTL compatible.

UVC3120 is in general identical to the UVC3100, except that the input amplifier, voltage reference and clamping circuitry of the A/D section have been omitted.

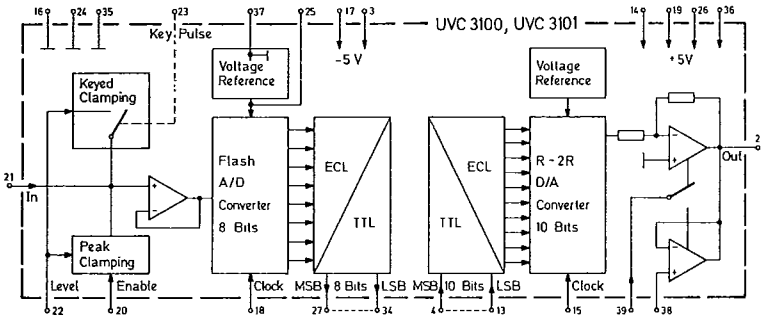

UVC3100, UVC3101 Block Diagram

TCA1003, TCA1004 Integrated AF Amplifiers (Miniature Plastic Package)

Bipolar integrated circuits with very small dimensions, containing a 5-stage AF amplifier designed for an 1.3 V supply and thus especially suited for hearing aids and similar applications. Three of the five amplifier stages form the amplifier block I shown in the circuit diagram, and two amplifier stages form the amplifier block II.

Both amplifier blocks can be equipped with separate feedback circuits determining gain and frequency response. As for the TCA1004, part of the feedback network is already on-chip. The current consumption of these ICs is about 1 mA, the gain about 60 dB.

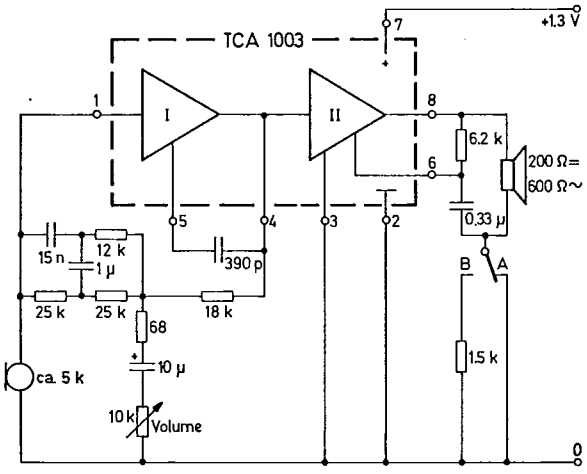

TCA1003 Application Circuit

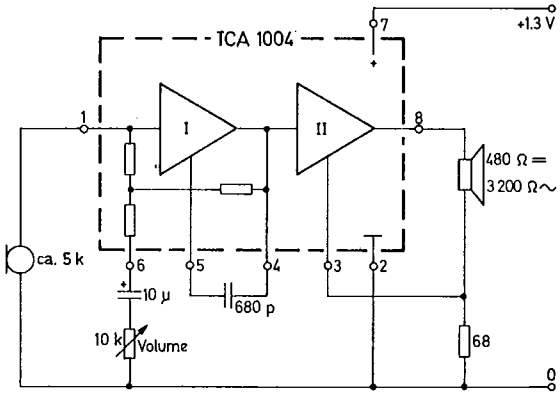

TCA1004 Application Circuit