REVISED DECEMBER 1983

- **Package Options Include Plastic and Ceramic DIPs**
- **Dependable Texas Instruments Quality and Reliability**

SN5450, SN54H50 . . . J PACKAGE
SN7450, SN74H50 . . . J OR N PACKAGE
(TOP VIEW)

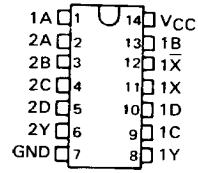

SN5450, SN54H50 . . . W PACKAGE
(TOP VIEW)

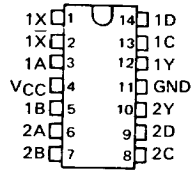

description

These devices contain two independent 2-wide 2-input AND-OR-INVERT gates with one gate expandable. They perform the Boolean function $Y = \overline{AB + CD + X}$ with X = output of SN5460/SN7460 for the SN5450/SN7450 and X = output of SN54H60/SN74H60 or SN54H62/SH74H62 for the SN54H50/SH74H50.

The SN5450 and SN54H50 are characterized for operation over the full military temperature range of −55 °C to 125 °C. The SN7450 and SN74H50 are characterized for operation from 0 °C to 70 °C.

logic diagram

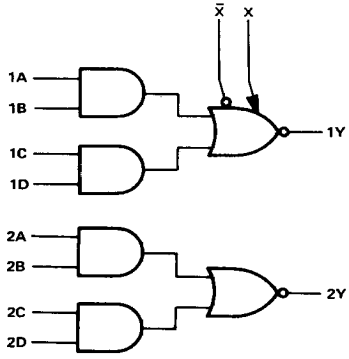

PRODUCTION DATA
This document contains information current as of publication date. Products conform to specifications per the terms of Texas Instruments standard warranty. Production processing does not necessarily include testing of all parameters.

TEXAS INSTRUMENTS
POST OFFICE BOX 225012 • DALLAS, TEXAS 75265

This Material Copyrighted By Its Respective Manufacturer

schematic

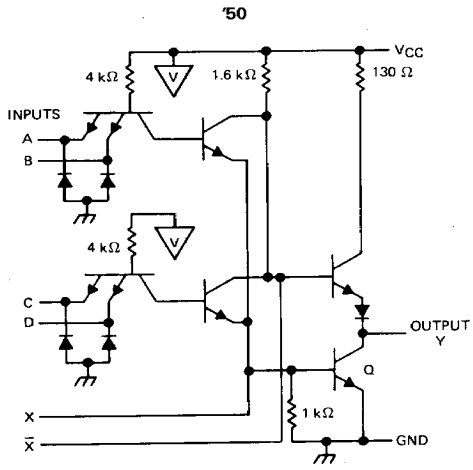

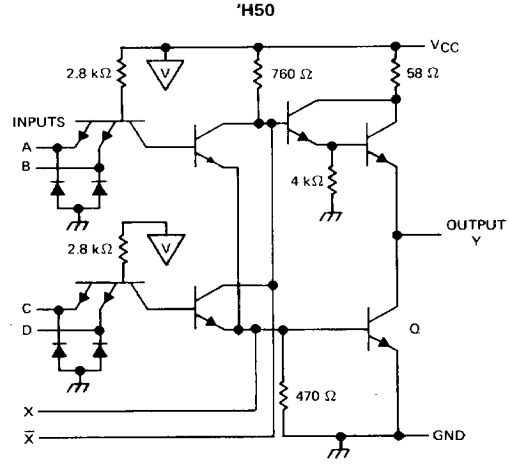

Resistor values shown are nominal.
If expander is not used, leave X and $\overline{X}$ open.

absolute maximum ratings over operating free-air temperature range (unless otherwise noted)

Supply voltage, V_{CC} (see Note 1)		7 V
Input voltage		5.5 V
Operating free-air temperature range:	SN54'	−55°C to 125°C
	SN74'	0°C to 70°C
Storage temperature range		−65°C to 150°C

NOTE 1: Voltage values are with respect to network ground terminal.

This Material Copyrighted By Its Respective Manufacturer

recommended operating conditions

		SN5450			SN7450			UNIT
		MIN	NOM	MAX	MIN	NOM	MAX	
V_{CC}	Supply voltage	4.5	5	5.5	4.75	5	5.25	V
V_{IH}	High-level input voltage	2			2			V
V_{IL}	Low-level input voltage			0.8			0.8	V
I_{OH}	High-level output current			−0.4			−0.4	mA
I_{OL}	Low-level output current			16			16	mA
T_A	Operating free-air temperature	−55		125	0		70	°C

electrical characteristics over recommended operating free-air temperature range (unless otherwise noted)

PARAMETER	TEST CONDITIONS†			SN5450			SN7450			UNIT
				MIN	TYP‡	MAX	MIN	TYP‡	MAX	
V_{IK}	V_{CC} = MIN,	I_I = −12 mA				−1.5			−1.5	V
V_{OH}	V_{CC} = MIN,	V_{IL} = 0.8 V,	I_{OH} = −0.4 mA	2.4	3.4		2.4	3.4		V
V_{OL}	V_{CC} = MIN,	V_{IH} = 2 V,	I_{OL} = 16 mA		0.2	0.4		0.2	0.4	V
I_I	V_{CC} = MAX,	V_I = 5.5 V				1			1	mA
I_{IH}	V_{CC} = MAX,	V_{IH} = 2.4 V				40			40	μA
I_{IL}	V_{CC} = MAX,	V_{IL} = 0.4 V				−1.6			−1.6	mA
I_{OS}§	V_{CC} = MAX			−20		−55	−18		−55	mA
I_{CCH}	V_{CC} = MAX,	V_I = 0 V			4	8		4	8	mA
I_{CCL}	V_{CC} = MAX,	See Note 2			7.4	14		7.4	14	mA
$I_{\overline{X}}$▲	$V_{\overline{X}X}$ = 0.4 V,	I_{OL} = 16 mA				−2.9			−3.1	mA
$V_{BE(Q)}$▲	$I_X + I_{\overline{X}}$ = 0.41 mA,	$R_{\overline{X}X}$ = 0,	I_{OL} = 16 mA			1.1				V
	$I_X + I_{\overline{X}}$ = 0.62 mA,	$R_{\overline{X}X}$ = 0,	I_{OL} = 16 mA						1	
V_{OH}▲	I_X = 0.15 mA,	$I_{\overline{X}}$ = −0.15 mA,	I_{OH} = −0.4 mA	2.4	3.4					V
	I_X = 0.27 mA,	$I_{\overline{X}}$ = −0.27 mA,	I_{OH} = −0.4 mA				2.4	3.4		
V_{OL}▲	$I_X + I_{\overline{X}}$ = 0.3 mA,	$R_{\overline{X}X}$ = 138 Ω,	I_{OL} = 16 mA		0.2	0.4				V
	$I_X + I_{\overline{X}}$ = 0.43 mA,	$R_{\overline{X}X}$ = 130 Ω,	I_{OL} = 16 mA					0.2	0.4	

† For conditions shown as MIN or MAX, use the appropriate value specified under recommended operating conditions.
‡ All typical values are at V_{CC} = 5 V, T_A = 25°C.
§ Not more than one output should be shorted at a time.
▲ Using expander inputs, V_{CC} = MIN, T_A = MIN, except typical values.
NOTE 2: All inputs of one AND gate at 4.5 V, all others at GND.

switching characteristics, V_{CC} = 5 V, T_A = 25°C (see note 3)

PARAMETER	FROM (INPUT)	TO (OUTPUT)	TEST CONDITIONS	MIN	TYP	MAX	UNIT
t_{PLH}	Any	Y	R_L = 400 Ω, C_L = 15 pF, Expander pins open		13	22	ns
t_{PHL}					8	15	ns

NOTE 3: See General Information Section for load circuits and voltage waveforms.

TEXAS INSTRUMENTS
POST OFFICE BOX 225012 • DALLAS, TEXAS 75265

This Material Copyrighted By Its Respective Manufacturer

recommended operating conditions

		SN54H50			SN74H50			UNIT
		MIN	NOM	MAX	MIN	NOM	MAX	
V_{CC}	Supply voltage	4.5	5	5.5	4.75	5	5.25	V
V_{IH}	High-level input voltage	2			2			V
V_{IL}	Low-level input voltage			0.8			0.8	V
I_{OH}	High-level output current			−0.5			−0.5	mA
I_{OL}	Low-level output current			20			20	mA
T_A	Operating free-air temperature	−55		125	0		70	°C

electrical characteristics over recommended operating free-air temperature range (unless otherwise noted)

PARAMETER	TEST CONDITIONS†			SN54H50			SN74H50			UNIT
				MIN	TYP‡	MAX	MIN	TYP‡	MAX	
V_{IK}	V_{CC} = MIN,	I_I = −8 mA				−1.5			−1.5	V
V_{OH}	V_{CC} = MIN,	V_{IL} = 0.8 V,	I_{OH} = −0.5 mA	2.4	3.4		2.4	3.4		V
V_{OL}	V_{CC} = MIN,	V_{IH} = 2 V,	I_{OL} = 20 mA		0.2	0.4		0.2	0.4	V
I_I	V_{CC} = MAX,	V_I = 5.5 V				1			1	mA
I_{IH}	V_{CC} = MAX,	V_{IH} = 2.4 V				50			50	μA
I_{IL}	V_{CC} = MAX,	V_{IL} = 0.4 V				−2			−2	mA
I_{OS}§	V_{CC} = MAX			−40		−100	−40		−100	mA
I_{CCH}	V_{CC} = MAX,	V_I = 0 V			8.2	12.8		8.2	12.8	mA
I_{CCL}	V_{CC} = MAX,	See Note 2			15.2	24		15.2	24	mA
$I_{\overline{X}}$▲	$V_{\overline{X}}$ = 1.4 V,	I_X = 0,	I_{OL} = 0			−5.85			−6.3	mA
$V_{BE(Q)}$▲	$I_X + I_{\overline{X}}$ = 0.7 mA,	$R_{\overline{X}X}$ = 0,	I_{OL} = 20 mA			1.1				V
	$I_X + I_{\overline{X}}$ = 1.1 mA,	$R_{\overline{X}X}$ = 0,	I_{OL} = 20 mA						1	
V_{OH}▲	I_X = 0.32 mA,	$I_{\overline{X}}$ = −0.32 mA,	I_{OH} = −0.5 mA	2.4	3.4					V
	I_X = 0.57 mA,	$I_{\overline{X}}$ = −0.57 mA,	I_{OH} = −0.5 mA				2.4	3.4		
V_{OL}▲	$I_X + I_{\overline{X}}$ = 0.47 mA,	$R_{\overline{X}X}$ = 68 Ω,	I_{OL} = 20 mA		0.2	0.4				V
	$I_X + I_{\overline{X}}$ = 0.6 mA,	$R_{\overline{X}X}$ = 63 Ω,	I_{OL} = 20 mA					0.2	0.4	

† For conditions shown as MIN or MAX, use the appropriate value specified under recommended operating conditions.
‡ All typical values are at V_{CC} = 5 V, T_A = 25°C.
§ Not more than one output should be shorted at a time, and duration of the short circuit should not exceed one second.
▲Using expander inputs, V_{CC} = MIN, T_A = MIN, except typical values.
NOTE 2: All inputs of one AND gate at 4.5 V, all others at GND.

switching characteristics, V_{CC} = 5 V, T_A = 25°C (see note 3)

PARAMETER	FROM (INPUT)	TO (OUTPUT)	TEST CONDITIONS		MIN	TYP	MAX	UNIT
t_{PLH}	Any	Y	R_L = 280 Ω, Expander pins open	C_L = 25 pF		6.8	11	ns
t_{PHL}						6.2	11	ns
t_{PLH}			R_L = 280 Ω, Ground to $\overline{X}$	C_L = 25 pF, C = 15 pF		11		ns
t_{PHL}						7.4		ns

NOTE 3: See General Information Section for load circuits and voltage waveforms.

3

TTL DEVICES

This Material Copyrighted By Its Respective Manufacturer