Ordering number : EN5388

Monolithic Digital IC

No. 5388

LB8112V

Loading Motor Driver with Built-in Sensor Amplifiers

Overview

The LB8112V integrates a driver for a video cassette deck loading motor and the associated peripheral sensor amplifiers in a single chip. The LB8112V can implement circuits with low saturation voltages and low power levels since it can directly drive power transistors from the V_M power supply.

Functions and Features

- Built-in output current control and detection circuits for the loading motor
- Two reel motor FG amplifiers
- Two top-end sensors
- Two buffer amplifiers and an overcurrent protection circuit
- Thermal shutdown

Package Dimensions

unit: mm

3191-SSOP30

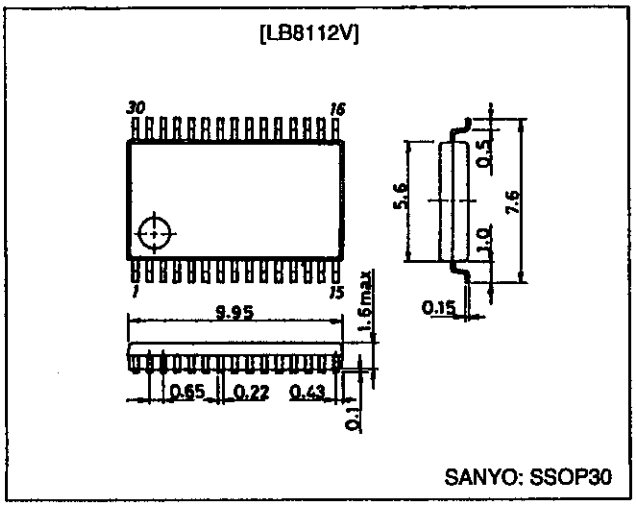

Specifications

Absolute Maximum Ratings at Ta = 25°C

Parameter	Symbol	Conditions	Ratings	Unit
Maximum supply voltage	$V_{CC}1$ max		7	V
	$V_{CC}2$ max		11	V
	V_M max		$V_{CC}2$	V
Maximum output current	I_M max	Continuous, Pd < 0.5 W	600	mA
Input voltage	V_{IN}		−0.3 to $V_{CC}1$ +0.3	V
Allowable power dissipation	Pd max	Independent device, Tj = 150°C	0.5	W
Operating temperature	Topr		−20 to +80	°C
Storage temperature	Tstg		−55 to +150	°C

Allowable Operating Ranges at Ta = 25°C

Parameter	Symbol	Conditions	Ratings	Unit
Supply voltage	$V_{CC}1$		2.7 to 4.0	V
	$V_{CC}2$	$V_{CC}2 \geq V_{CC}1$	2.7 to 9	V
V_M voltage	V_M		2.2 to $V_{CC}2$	V

Electrical Characteristics at Ta = 25°C, $V_{CC}1$ = 3 V, $V_{CC}2$ = 4.75 V, V_M = 3.0 V

Parameter	Symbol	Conditions	min	typ	max	Unit
$V_{CC}1$ current drain	$I_{CC}11$	Standby mode		2.3	4	mA
	$I_{CC}12$	Forward/reverse mode, LIMIT and EN = low		14	19	mA
	$I_{CC}13$	Brake mode, LIMIT and EN = low		10	14	mA
$V_{CC}2$ current drain	$I_{CC}21$	Standby mode ($V_{CC}1$ = open)		0.1	20	μA
	$I_{CC}22$	Standby mode ($V_{CC}1$ = 3.0 V)		0.460	1	mA
	$I_{CC}23$	Forward/reverse mode		18.5	25	mA
V_M current drain		Standby mode		0.1	20	μA
[Logic Inputs (the DEC1, DEC2, LIMIT, and EN pins)]						
Input high-level voltage	V_{INH}	$V_{CC}1$ = 2.7 to 4.0	2.0			V
High-level input current	I_{INH}	V_{IN} = 3.0 V		46	65	μA
Input low-level voltage	V_{INL}	$V_{CC}1$ = 2.7 to 4.0			0.6	V
Low-level input current	I_{INL}	V_{IN} = 0.6 V		4.6	10	μA
[Logic Outputs (the LIMITOUT, TOPOUT, and ENDOUT pins)]						
Output high-level voltage	V_{OUTH}	$V_{CC}1$ = 2.7 to 4.0, source current: 10 μA	$V_{CC}1 - 0.5$			V
Output low-level voltage	V_{OUTL}	$V_{CC}1$ = 2.7 to 4.0, sink current: 10 μA			0.4	V
[Loading Motor Driver]						
Output saturation voltage	$V_{(sat)}1$	I_O = 200 mA (vertical addition)		0.2	0.3	V
	$V_{(sat)}2$	I_O = 400 mA (vertical addition)		0.4	0.6	V
Limit current	I_{Limi}	V_{RS} = 200 mV, R_F = 1.0 Ω, R_L = 7.5 Ω	172	192	212	mA
Detection current	I_{DET}				400	mA
Limit current setting range	ΔI_{Lim}	V_{RS} = 0.1 to 0.3 V, R_F = 0.5 Ω, R_L = 4.7 Ω, V_M = 4.6 V	100		600	mA
[Reel FG Amplifier]						
Input offset voltage	V_{IO}			±1	±5	mA
Input bias current	V_B	V_{IN} = 0.3 V			250	nA
Common-mode input voltage range	V_{ICM}		1		2	V
Open-loop gain	G_V1	*		55		dB
Loop gain	G_V2		27	29	30.5	dB
Common-mode rejection ratio	C_{MR}	*	65	80		dB
Source output saturation voltage	V_{OU}	I_O = −40 μA		0.1	0.25	V
Sink output saturation voltage	V_{OD}	I_O = 40 μA		0.1	0.25	V
[LPF Buffer]						
Input offset	V_{IO}			±1	±7	mV
Input bias current	I_B	V_{IN} = 0 V			250	nA
Common-mode input voltage range	V_{ICM}		0		$V_{CC}2 - 1.5$	V
Open loop gain	G_V1	*		55		dB
Common-mode rejection ratio	C_{MR}	*	65	80		dB
Output voltage range	$V_{OUT}1$		0		$V_{CC}2 - 1.5$	V
Output current, Source	I_{SO}	V_O = 0 V	10			mA
Output current, Sink	$I_{SI}1$	V_O = 1.0 V	1			mA
	$I_{SI}2$	V_O = 0.2 V	18	36	45	μA
Bandwidth		*		1		MHz
[LPF Buffer Limiter]						
Input offset	V_{IO}			±1	±7	mV
Input bias	I_B	V_{IN} = 0.2 V			250	nA
Common-mode input voltage range	V_{ICM}		0		$V_{CC}1 - 1.5$	V

Note: * Items marked with an asterisk are design target values and are not tested.

Continued on next page.

Continued from preceding page.

Parameter	Symbol	Conditions	min	typ	max	Unit
[TOP/END sensor]						
Input resistance	R_{IN}	*	4	5	6	kΩ
Minimum input sensitivity	ΔV		±27	±35	±43	mV
Thermal shutdown operating temperature	T_{TSD}	*	150	180	210	°C
Thermal shutdown hysteresis	ΔT_{TSD}	*		15		°C

Note: * Items marked with an asterisk are design target values and are not tested.

Truth Tables

1. Loading motor truth table

Input		Output		Mode
DEC1	DEC2	OUT1	OUT2	
L	L	off	off	Standby
H	L	H	L	Forward
L	H	L	H	Reverse
H	H	L	L	Brake

2. Loading motor current limiter detection modes

LIMIT EN	OUT output	LIMIT OUT
H	LIMIT	L
	NONLIMIT	H
L	Saturation	H

Pin Assignment

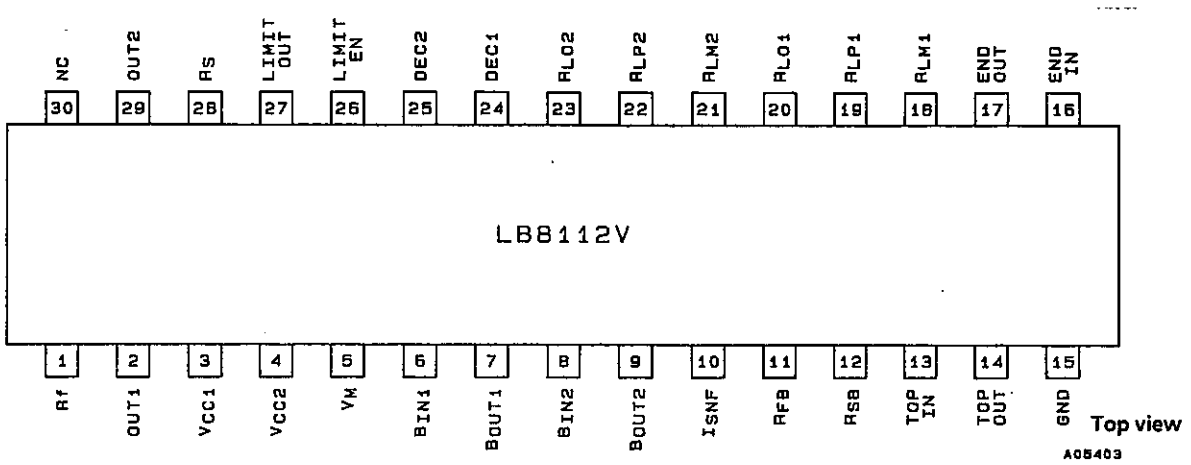

Pin Functions

Pin No.	Symbol	Pin voltage	Equivalent circuit	Function
1	Rf		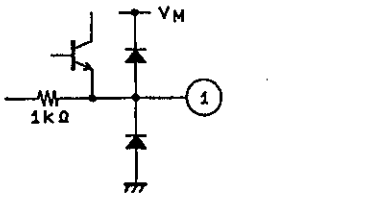	• P-ground for the output transistor • The output current is detected by a resistor inserted between the Rf pin and ground for motor current control.
2 29	OUT1 OUT2	0 to V_M	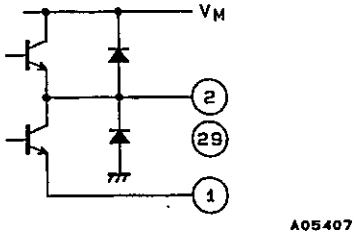	• Outputs • Connect these pins to the motor.
3	$V_{CC}1$	2.7 to 4.0 V		• Power supply for circuit other than the loading output block and the LPF buffer • This power supply must be stabilized so that noise does not enter at this pin.
4	$V_{CC}2$	2.7 to 9 V		• Power supply for the loading motor pre-driver and LPF buffer. • As is the case for $V_{CC}1$, this power supply must be stabilized so that noise does not enter at this pin.
5	V_M	2.2 to $V_{CC}2$		• Loading motor power supply • As is the case for $V_{CC}2$, this power supply must be stabilized so that noise does not enter at this pin.
6 8	$B_{IN}1$ $B_{IN}2$		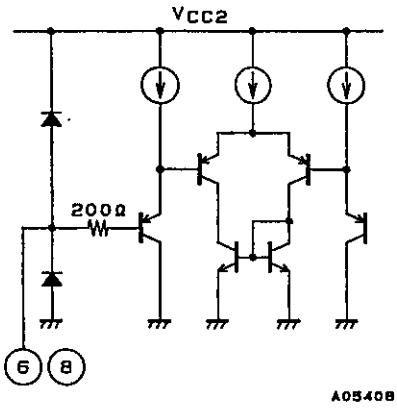	• LPF buffer input • This pin is used to form a low-pass filter as shown in the peripheral circuit example.
7 9	$B_{OUT}1$ $B_{OUT}2$		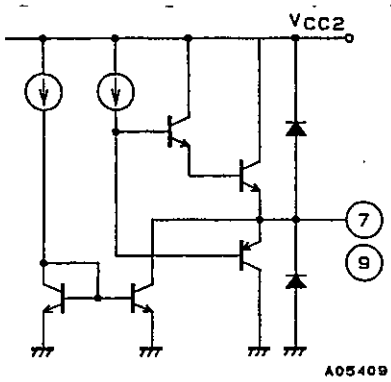	• LPF buffer output • Outputs a voltage identical to that applied to the buffer IN pin.

Continued on next page.

Continued from preceding page.

Pin No.	Symbol	Pin voltage	Equivalent circuit	Function
10 11	ISNF RFB		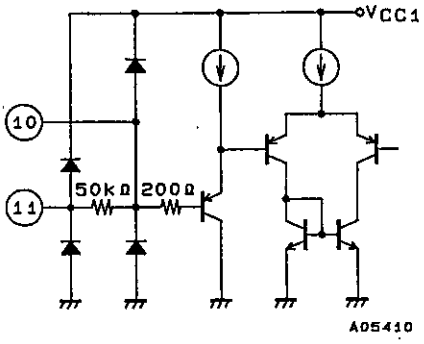	• ISNF is the connection for the limiter oscillation prevention capacitor. • RBF is the LPF current limiter current detection pin.
12	RSB		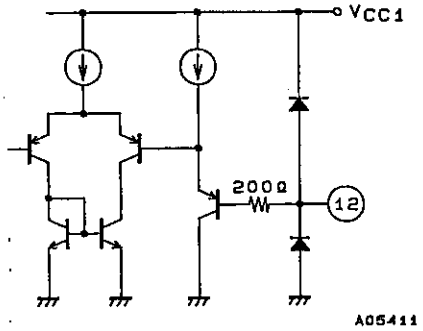	RSB is used to set the LPF limiter. The RSB pin voltage is determined by external circuits.
13 16	TOP_{IN} END_{IN}		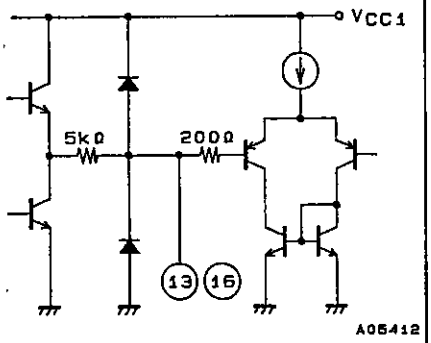	• Sense amplifier input block • Internal resistance: 5 kΩ • The output is inverted if a pulse in excess of ±35 mV is input to the IN pin.
15	GND			Ground that is common to P-GND and SGND.
14 17	TOP_{OUT} END_{OUT}	0 to $V_{CC}1$	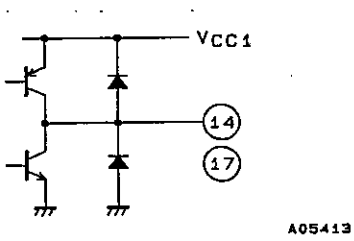	The top and end sensor outputs.
18 19 21 22	RLM1 RLP1 RLM2 RLP2		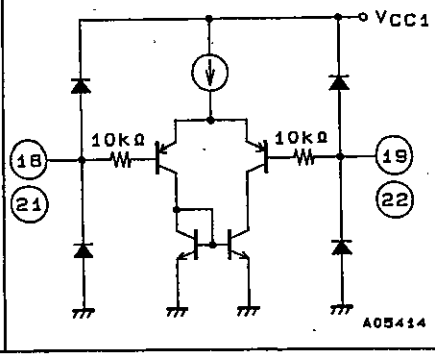	• The L-FG amplifier inputs • RLM1 and RLM2 are negative inputs. • RLP1 and RLP2 are positive inputs.

Continued on next page.

Continued from preceding page.

Pin No.	Symbol	Pin voltage	Equivalent circuit	Function
20 23	RLO1 RLO2	0 to $V_{CC}1$	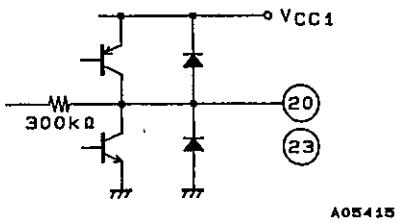	The R-FG amplifier outputs
24 25	DEC1 DEC2	0 to $V_{CC}1$	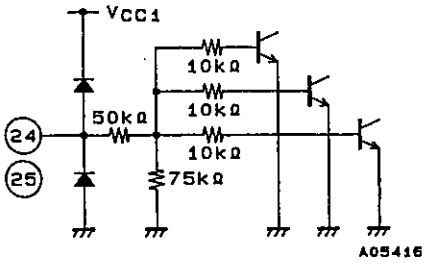	Loading motor inputs When $V_{CC}1$ = 3.0 V: 2.0 V or higher is high, and 0.6 V or lower is low.
26	LIMIT EN	0 to $V_{CC}1$	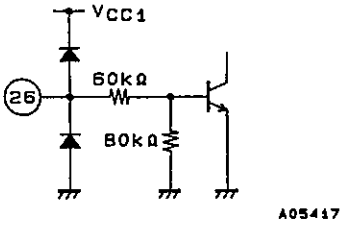	Current limiter on/off control When $V_{CC}1$ = 3.0 V, if this pin is: 2.0 V or higher: The current limiter will be on. 0.6 V or lower: The current limiter will be off.
27	LIMIT OUT	0 to $V_{CC}1$	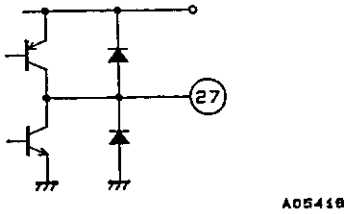	Current limiter detection output When $V_{CC}1$ = 3.0 V, if this pin is: 2.5 V or higher: The current limiter will be off. 0.4 V or lower: The current limiter will be on.
28	RS	0 to $V_{CC}1$–1.5 V	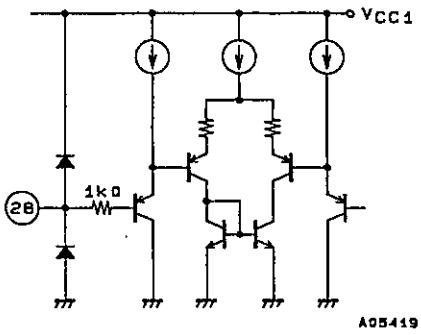	• Current limiter setting • Sets the limit current by setting the voltage between the Rf pin and GND.
30	NC			Unused pin (Must be left open.)

Peripheral Circuit Example

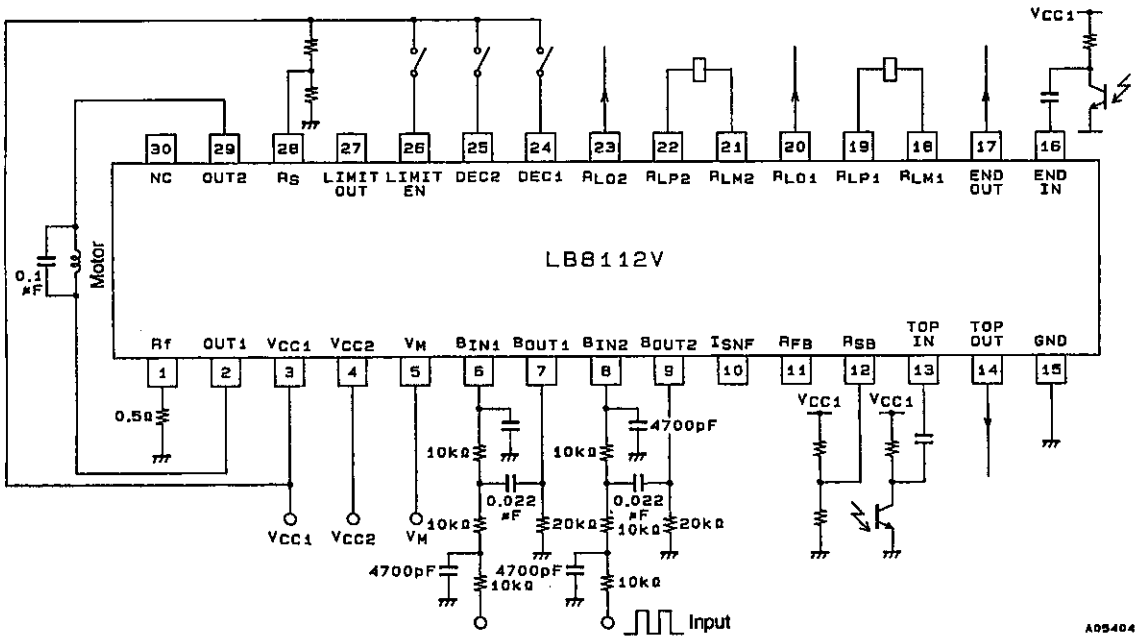

Equivalent Circuit Block Diagram

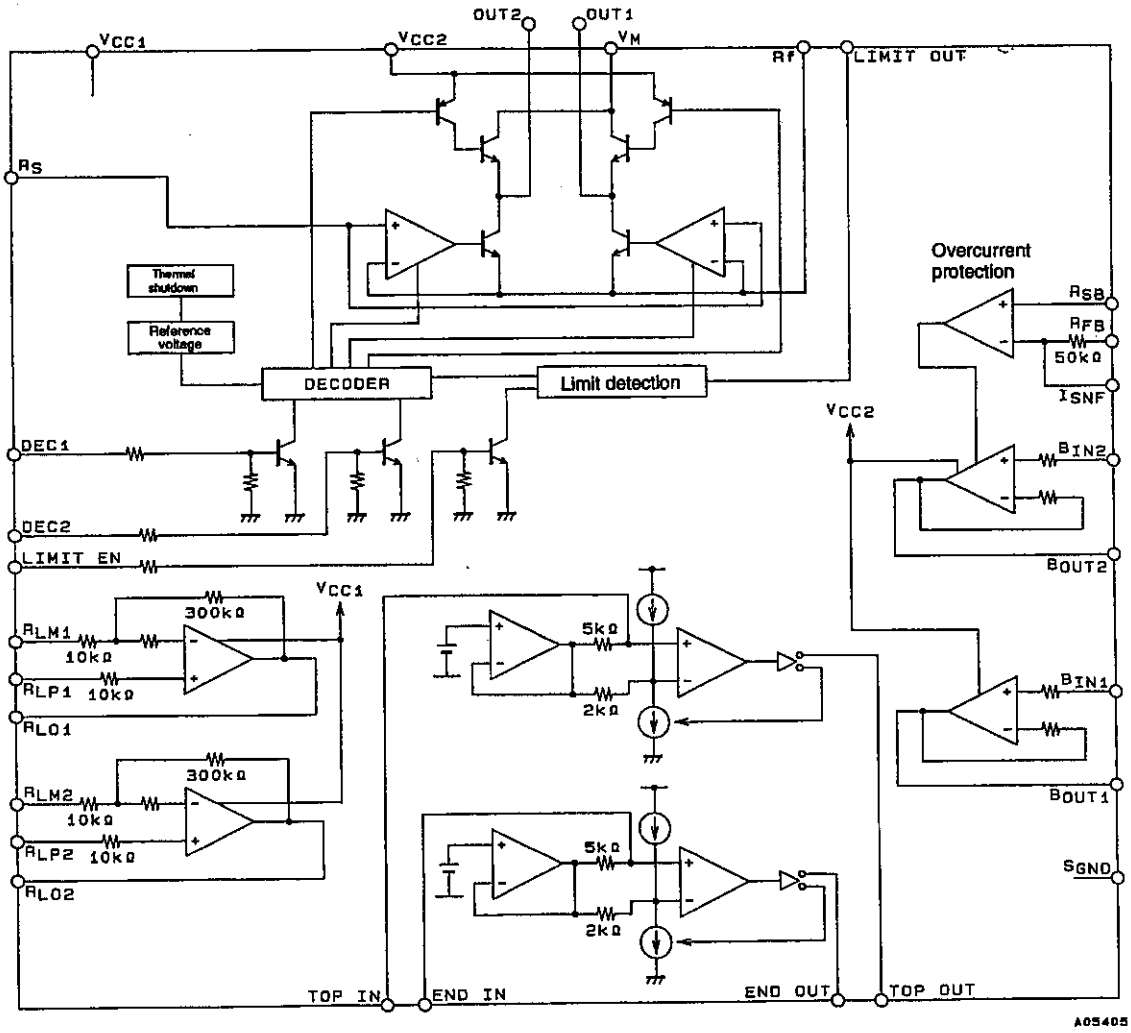

■ No products described or contained herein are intended for use in surgical implants, life-support systems, aerospace equipment, nuclear power control systems, vehicles, disaster/crime-prevention equipment and the like, the failure of which may directly or indirectly cause injury, death or property loss.

■ Anyone purchasing any products described or contained herein for an above-mentioned use shall:
① Accept full responsibility and indemnify and defend SANYO ELECTRIC CO., LTD., its affiliates, subsidiaries and distributors and all their officers and employees, jointly and severally, against any and all claims and litigation and all damages, cost and expenses associated with such use:
② Not impose any responsibility for any fault or negligence which may be cited in any such claim or litigation on SANYO ELECTRIC CO., LTD., its affiliates, subsidiaries and distributors or any of their officers and employees jointly or severally.

■ Information (including circuit diagrams and circuit parameters) herein is for example only; it is not guaranteed for volume production. SANYO believes information herein is accurate and reliable, but no guarantees are made or implied regarding its use or any infringements of intellectual property rights or other rights of third parties.

This catalog provides information as of December, 1996. Specifications and information herein are subject to change without notice.