UU Common Mode Chokes

Meisongbei

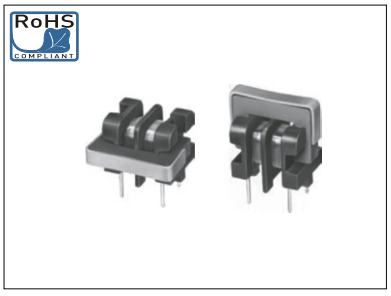

Features

- Small size and inexpensive type
- Easily inserted into PCB.
- Highly reliable, compact

Applications

- Multi-Function Telephones.
- Common Mode Chokes for Effective AC line Noise Prevention.
- AC Adapters, VCRS

Dimensions & Configurations (Unit:mm)

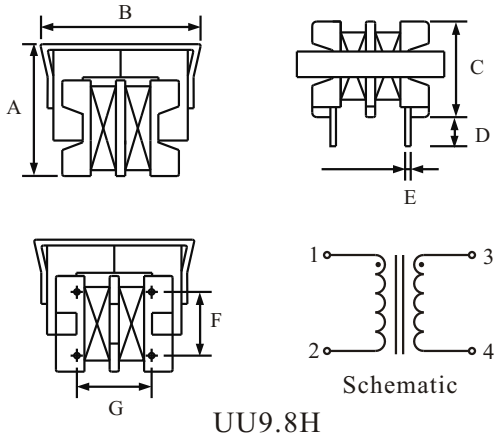

UU9.8H

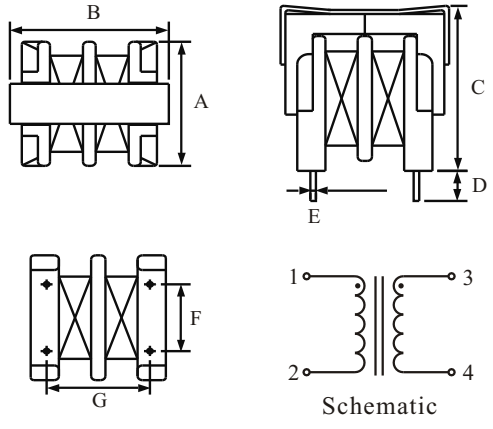

UU9.8/10/16

Electrical Characteristic s For UU9.8/9.8H/10/16 Series

Part Number	Inductance (min) [mH]	Inductance Tolerence (max)[μH]	DCR (max) [Ω]	IDC (max) [A]
UU9.8 & UU9.8H				
UU9.8(H)-471	0.47	25	0.15	1.00
UU9.8(H)-681	0.68	25	0.25	0.85
UU9.8(H)-102	1.0	50	0.35	0.70
UU9.8(H)-222	2.2	50	0.7	0.50
UU9.8(H)-392	3.9	100	1.2	0.38
UU9.8(H)-472	4.7	100	1.6	0.34
UU9.8(H)-682	6.8	150	2.5	0.25
UU9.8(H)-103	10.0	200	4	0.20
UU10				
UU10-332	3.3	100	0.71	0.65
UU10-682	6.8	200	1.26	0.44
UU10-123	12	360	2.20	0.34
UU10-223	22	440	3.64	0.25
UU10-333	33	660	5.74	0.20
UU10-513	51	1000	9.12	0.15
UU16				
UU16-152	1.5	40	0.13	1.9
UU16-402	4	60	0.27	1.2
UU16-802	8	80	0.46	0.9
UU16-203	20	150	1.60	0.5

Type	A (max)	B (max)	C (max)	D	E	F	G
UU9.8(H)	11.0	16.5	16.5	4.0	Φ0.6	7.0	8.0
UU9.8	15.5	16.5	12.5	4.0	Φ0.6	7.0	8.0
UU10	17.0	18.5	23.0	4.0	Φ0.7	10.0	13.0
UU16	20.0	22.0	28.5	4.0	Φ0.7	10.0	13.0

Note: Design as Customer's Requested Specifications.