RoHS Compliance

Applications :

- CPU , Graphics , Multimedia A / V clocks
- MPEG / DVD / HDTV clocks
- Laser engine pixel / set - top clocks
- OC-3 , OC-12 , OC-48 and OC-192 clocks
- SONET / SDH / ATM clocks
- Fast Ethernet and Gigabit Ethernet clocks
- NTSC / PAL encoder / decoder clocks
- PLL / synthesizer clocks
- Fibre channel and ADSL clocks

General Specifications

T_A = +25°C , V_{DD}= at specified voltage , Load : 15 pF

Model		" **H** " series			
Input Voltage (V_{DD})		V_{DD} = +1.8V D.C.±5% Voltage code is " 18 "	V_{DD} = +2.5V D.C.±5% Voltage code is " 25 "	V_{DD} = +3.3 V D.C.±5% Voltage code is " 3 "	V_{DD} = +5.0V D.C.±10% Voltage code is " 5 "
Frequency Range		1.8 MHz ~ 60.0 MHz	0.3 MHz ~ 125.0 MHz	20.0 KHz ~ 130.0 MHz	20.0 KHz ~ 160.0 MHz
Output Wave Form		CMOS	CMOS	T T L / CMOS	T T L / CMOS
Output Logic High " 1 "	T T L			2.4 V	2.4 V
	CMOS	1.62 V	2.25 V	2.97 V	4.5 V
Output Logic Low " 0 "	T T L			0.4 V	0.4 V
	CMOS	0.18 V	0.25 V	0.33 V	0.5 V

Frequency Stability (1) Codes	Frequency Stability over Operating Temperature Range	± 25 ppm	± 50 ppm	± 100 ppm	If non-standard , please enter the desired stability after the " C " or " I " represents (e.g. "C20" ±20 ppm over 0°C to +70°C ; " I20 " represents ± 20 ppm over -40°C to +85°C)
	Commercial (*-10°C to +70°C*)	*A*	*B*	*C*	
	Industrial (*-40°C to +85°C*)	*D*	*E*	*F*	

Output Load	T T L	2 ~ 10 (LS) T T L gates
	CMOS	15 pF typical; 30 pF load for frequencies up to 70 MHz; 50 pF load available as an option.
Rise Time (Tr)	T T L	10 n sec.(max.) ; 3 n sec.(typical) . Measured between 0.4V_{DC} ↔ 2.4V_{DC} (RL=390Ω ; CL = 15pF)
Fall Time (Tf)	CMOS	10 n sec.(max.) ; 3 n sec.(typical) . Measured between 10% to 90% wave form (CL=15pF)
Duty Cycle	T T L	40% (min.) , 60%(max.) Measured at +1.4V
	CMOS	40% (min.) , 60%(max.) Measured at 50% of wave form [50% ± 5% is also available , add " S " for suffix .
Start -Up Time (Ts)		10 m sec. (max.) ; 5 m sec. (typical)
Current Consumption		10 ~ 45 mA (frequency dependent)
Storage Temperature		- 50°C to 100°C
Aging		±5 ppm per year (max.)
Tri-State Option.		Output is high impedance when " 0 " is applied to pin 1 . Disable time is 150 n sec. max. Add " T " in part number for Tri-State option

Clock Oscillators (HCMOS / Square Wave ; Ceramic SMD ; Under 125 MHz)

" SWO " series ; " H53 " series and " H32 " series

Mercury
Since 1973

RoHS Compliance

Applications :

- CPU , Graphics , Multimedia A / V clocks
- MPEG / DVD / HDTV clocks
- Laser engine pixel / set - top clocks
- OC-3 , OC-12 , OC-48 and OC-192 clocks
- SONET / SDH / ATM clocks
- Fast Ethernet and Gigabit Ethernet clocks
- NTSC / PAL encoder / decoder clocks
- PLL / synthesizer clocks
- Fibre channel and ADSL clocks

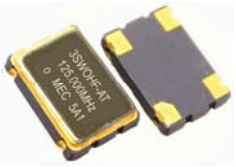

General Specifications

T_A = +25°C , V_{DD}= at specified voltage , Load : 15 pF

Model	" **SWO** " ; " **H53** " and " **H32** " series			
	Overall Frequency Range	Supply Voltage Choices	Output Logic	Package Dimensions
" **SWO** " series	0.3125 ~ 125 MHz	1.8 V; 2.5 V; 3.3 V or 5.0 V	CMOS	5.0 x 7.0 x 1.4 mm
" **H53** " series	1.0 ~ 125 MHz	1.8 V; 2.5 V; 3.3 V or 5.0 V	CMOS	3.2 x 5.0 x 1.2 mm
" **H32** " series	1.0 ~ 54 MHz	1.8 V; 2.5 V; 3.3 V or 5.0 V	CMOS	2.5 x 3.2 x 1.0 mm
Supply Voltage (V_{DD})	V_{DD} = **+1.8V** D.C.±5% Voltage code is " 18 "	V_{DD} = **+2.5V** D.C.±5% Voltage code is " 25 "	V_{DD} = **+3.3 V** D.C.±5% Voltage code is " 3 "	V_{DD} = **+5.0V** D.C.±10% Voltage code is " 5 "
Available Frequency Range by V_{DD}	1.0 ~ 160.0MHz	0.3 ~ 160.0 MHz	0.3 ~ 160.0 MHz	0.5 ~ 125.0 MHz
Output Logic High "1" (90% of V_{DD} min.)	1.62 V min.	2.25 V min.	2.97 V min.	4.5 V min.
Output Logic Low "0" (10% of V_{DD} max.)	0.18 V max.	0.25 V max.	0.33 V max.	0.5 V max.
Current Consumption	1.0 ~ 1.5MHz : 5 mA max.	0.3 ~ 1.5MHz : 5 mA max.	0.3 ~ 1.5MHz : 5 mA max.	0.3 ~ 1.5MHz : 5 mA max.
	1.5 ~ 20MHz : 8 mA max.	1.5 ~ 20MHz : 8 mA max.	1.5 ~ 20MHz : 8 mA max.	1.5 ~ 20MHz : 10 mA max.
	20 ~ 50MHz : 15 mA max.	20 ~ 50MHz : 15 mA max.	20 ~ 50MHz : 15 mA max.	20 ~ 50MHz : 25 mA max.
	50 ~ 60MHz : 22 mA max.	50 ~ 125MHz : 25 mA max.	50 ~ 125MHz : 35 mA max.	50 ~ 125MHz : 40 mA max.

Frequency Stability [1] Codes	Frequency Stability over Operating Temperature Range	± 25 ppm	± 50 ppm	± 100 ppm	If non-standard , please enter the desired stability after the " C " or " I " represents (e.g. "C20" ±20 ppm over 0°C to +70°C ; " I20 " represents ± 20 ppm over -40°C to +85°C)
	Commercial (*-10°C to +70°C*)	*A*	*B*	*C*	
	Industrial (*-40°C to +85°C*)	*D*	*E*	*F*	

Load	15 pF max. ; (30 pF and 50 pF load are also available for +3.3V and +5.0V V_{DD})			
Duty Cycle (at 50% of wave form)	Standard: 50% ± 10%; Option: 50% ± 5%. Please add "**-S**" at the end of the part number for ± 5% .			
Start -up Time (Ts)	1.0 ~ 32.0 MHz : 5 m sec. (max.) ; 32.0 ~ 125.0 MHz : 10 m sec. (max.)			
Rise Time (Tr) / Fall Time (Tf)	5 n sec. (max.)	7 n sec. (max.)	10 n sec. (max.)	10 n sec. (max.)
	Measured between 10% ↔ 90% of wave form (CL = 15pF)			
Storage Temperature	- 50°C to 100°C			
Aging	± 5 ppm per year (max.)			
Tri-state Function on pad No. 1 [For SWO , H53 , H32 is standard series]	Note: Pad No. 1 is Tri-State by default for all SWO series. That is: The output (pad No. 3) is active if no connection or voltage of 2.2V The output (pad No. 3) is high impedance when voltage of 0.8V or Disable time is 150 n sec. max.; Enable time is 10 m sec. max.			

Note : [1] Inclusive of 25°C tolerance , operating temperature range , ±10% input voltage variation , load change , aging , shock and vibration.

Mercury www .mercury-crystal.com
■Taiwan : Tel (886)-2-2406-2779 / sales-tw@mercury-crystal.com ■U.S.A: Tel: (1)-909-466-0427 / sales-us@mercury-crystal.com ■China: Tel: (86)-512-5763-8100 / sales-cn@mecxtal.com

Clock Oscillators (Ultra Low Current , CMOS / Square Wave)

" HK53 " series (5.0 * 3.2 * 1.2 mm)
" HK57 " series (7.0 * 5.0 * 1.4 mm)

Mercury
Since 1973

RoHS Compliance

- HK series is specifically designed for battary operated portable or hand-held consumer electronic devices where small size and low current consumption are mandatory .
- HK series 27.000 MHz consumes less than 1.7 mA at operation mode of +1.8V and less than 2 uA at disabled mode .
- Phase noise is -130 dBc/Hz at 10 KHz offset .
- HK series can operate at voltage as low as 1.8 V .

General Specifications

T_A = +25°C , V_{DD}= at specified voltage , Load : 15 pF

Model		HK53			HK57		
Frequency Range		0.37 ~ 50.0 MHz			0.25 ~ 50.0 MHz		
Input Voltage Range (V_{DD})		+1.8 V ± 10%	+2.5 V ± 10%	+3.3 V ± 10%	+1.8 V ± 10%	+2.5 V ± 10%	+3.3 V ± 10%
Supply Voltage Code		" 18 "	" 25 "	" 33 "	" 18 "	" 25 "	" 33 "
Output Voltage High " 1 " (V_{OH})		+ 1.4 V (min.)	+ 2.0 V (min.)	+ 2.4 V (min.)	+ 1.4 V (min.)	+ 2.0 V (min.)	+ 2.4 V (min.)
Output Voltage Low " 0 " (V_{OL})		+ 0.2 V (max.)	+ 0.3 V (max.)	+ 0.4 V (max.)	+ 0.2 V (max.)	+ 0.3 V (max.)	+ 0.4 V (max.)
Current Consumption mA , (typical)	10.000 MHz	- - -	- - -	- - -	0.7 mA	1.0 mA	1.5 mA
	13.500 MHz	- - -	- - -	- - -	0.9 mA	1.3 mA	1.9 mA
	16.000 MHz	1.1 mA	1.6 mA	2.2 mA	1.1 mA	1.6 mA	2.2 mA
	20.945 MHz	1.4 mA	1.9 mA	2.6 mA	1.4 mA	1.9 mA	2.6 mA
	25.000 MHz	1.6 mA	2.2 mA	3.1 mA	1.6 mA	2.2 mA	3.1 mA
	27.000 MHz	1.7 mA	2.4 mA	3.3 mA	1.7 mA	2.4 mA	3.3 mA
	30.000 MHz	2.0 mA	2.8 mA	3.8 mA	2.0 mA	2.8 mA	3.8 mA
	38.000 MHz	2.3 mA	3.3 mA	4.5 mA	2.3 mA	3.3 mA	4.5 mA
	50.000 MHz	2.70 mA	4.0 mA	5.0 mA	2.70 mA	4.0 mA	5.0 mA
Rise Time (Tr) / Fall Time (Tf)		4 n sec. (typical) when measured from (10% V_{DD} ↔ 90% V_{DD})					
Fanout (Drive Capability)		12 mA (typical) ; as TTL output (+3.3V)					
Duty Cycle (at 50% of wave form)		50% ± 5% . measured at +1.4V VD.C.					
Start -up Time (Ts)		10 m sec. (typical) ; V_{DD} reaches 1.62 V					
Load		15 pF					
Voltage Sensitivity		± 0.8 ppm (typical) with 10% variation of V_{DD}					
Frequency Stability [1] Codes		Frequency Stability over Operating Temperature Range	± 25 ppm	± 50 ppm	± 100 ppm	If non-standard , please enter the desired stability after the " C " or " I " represents (e.g. "C20" ±20 ppm over 0°C to +70°C ; " I20 " represents ± 20 ppm over -40°C to +85°C)	
		Commercial (*-10°C to +70°C*)	*A*	*B*	*C*		
		Industrial (*-40°C to +85°C*)	*D*	*E*	*F*		
Storage Temperature		- 50°C to 100°C					
Aging		± 5 ppm per year (max.)					
Tri-state Function on pad No. 1		When connected to ground : Output is disabled (oscillator is off) When no connected or connected to logic high : Clock output Disable time is 10 m sec. (typical) Enable time (when ground is removed from pad 1) is 10 m sec. max.					

Note : [1] Inclusive of 25°C tolerance , operating temperature range , ±10% input voltage variation , load change , aging , shock and vibration.

Crystal Clock Oscillators (LVCMOS square wave ; 125.01 to 800 MHz)

" HF " series ; " HW " series ; " HV " series (6 pads , SMD package)

Mercury
Since 1973

For high frequency (>125.0 MHz) LVCMOS output clock oscillators, Mercury offers HF, HW and HW series.

- " HF " series: Best performance among the three. Phase jitter is less than 1 ps.
- " HW " and "HV" use high-Q fundamental crystal and multiplier circuit for low cost applications.
- jitter is moderate. HW is up to 800 MHz. HV is up to 200 MHz .

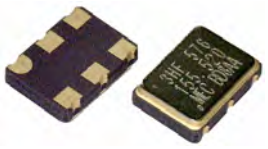

RoHS Compliance

General Specifications

Model	" ***HF*** " series		" ***HW*** " series		" ***HV*** " series
Technology	High Q fundamental crystal + ultra low jitter multiplier circuit		High Q fundamental crystal + low jitter multiplier circuit		High Q fundamental crystal + low jitter multiplier circuit
Output Logic	LVCMOS				
Available Frequency Range	125.01 MHz ~ 200.0 MHz (15 pF load) 125.01 MHz ~ 320.0 MHz (10 pF load)		125.01 MHz ~ 800.0 MHz		125.01 MHz ~ 200.0 MHz
Supply Voltage V_{DD}	+2.5 V_{DD} ± 5%	+3.3 V_{DD} ± 5%	+3.3 V_{DD} ± 5%		+3.3 V_{DD} ± 5%
Supply Voltage Code	" 25 "	" 3 "	" 3 "		" 3 "
Output Logic " High " , " 1 "	90% of V_{DD} min.				
Output Logic " Low " , " 0 "	10% of V_{DD} max.				
Integrated Phase Jitter (12 KHz to 20 MHz)	0.4 ps typical; 0.5 ps max. For 156.250 MHz		2.6 ps typical; 4 ps max. For 155.520 MHz		2.3 ps typical; 4 ps max. For 155.520 MHz
Period Jitter RMS ; Decoupling capacitor between V_{DD} and	3 ps typical; 5 ps max. For 156.250 MHz		4.3 ps typical. For 155.520 MHz		4.0 ps typical. For 155.520 MHz
Period Jitter (peak-to-peak ; Decoupling capacitor between V_{DD} and ground)	20 ps typical; 30 ps max. For 156.250 MHz		27 ps typical. For 155.520 MHz		27 ps typical. For 155.520 MHz
Current Consumption (15 pF load)	40 mA max.		40 mA max.		25 mA max.
Rise Time / Fall Time	0.7 ns typical (0.3 V↔3.0V, 15 pF load)		2.4 ns typical (0.3 V↔3.0V, 15 pF load)		2.4 ns typical (0.3 V↔3.0V, 15 pF load)
Frequency Stability [1] Codes	Frequency Stability over Operating Temperature Range		± 25 ppm	± 50 ppm	± 100 ppm
	Commercial (*-10°C to +70°C*)		*A*	*B*	*C*
	Industrial (*-40°C to +85°C*)		*D*	*E*	*F*
			If non-standard , please enter the desired stability after the " C " or " I " represents (e.g. "C20" ±20 ppm over 0°C to +70°C ; " I20 " represents ± 20 ppm over -40°C to +85°C)		
Load	15 pF				
Start-up Time	10 m sec. (max.)				
Duty Cycle	50% ± 5% (measured at 50% V_{DD})				
Input Static Discharge Protection	2 KV (min.)				
Storage Temperature	-55°C to + 150°C				
Aging at Ta=+25ºC	± 3 ppm max. first year ; ± 2 ppm max. per year thereafter				
Absolute Maximum Rating (permanent damage may be created if operate beyond limits specified.)					
Supply Voltage V_{DD}	+ 4.6 V D.C. (max.)				
Input Voltage Vi	V_{SS} -0.5 (min.) ; V_{DD} + 0.5V (max.)				
Input Voltage Vo	V_{SS} -0.5 (min.) ; V_{DD} + 0.5V (max.)				
Tri - State Function	5761 on pad No. 1 5762 on pad No. 2	Tri-state Enable High. No connection or 70% of V_{DD} min. is applied to a Tri-state pad to enable both outputs. 30% of V_{DD} max. to disable both outputs (high impedance).			
Phase Noise	Offset	Frequency: 156.250 MHz	Frequency: 155.520 MHz		Frequency: 155.520 MHz
	10 Hz	-62 dBc / Hz	-65 dBc / Hz		-65 dBc / Hz
	100 Hz	-92 dBc / Hz	-95 dBc / Hz		-95 dBc / Hz
	1 KHz	-120 dBc / Hz	-120 dBc / Hz		-120 dBc / Hz
	10 KHz	-132 dBc / Hz	-125 dBc / Hz		-128 dBc / Hz
	100 KHz	-128 dBc / Hz	-121 dBc / Hz		-122 dBc / Hz
	1 MHz	-140 dBc / Hz	-120 dBc / Hz		-120 dBc / Hz
	10 MHz	-150 dBc / Hz	-140 dBc / Hz		-140 dBc / Hz

[1] Inclusive of 25ºC tolerance, operating temperature range, ±10% input voltage variation, load change, aging shock and vibration

Mercury www .mercury-crystal.com

■Taiwan : Tel (886)-2-2406-2779 / sales-tw@mercury-crystal.com ■U.S.A: Tel: (1)-909-466-0427 / sales-us@mercury-crystal.com ■China: Tel: (86)-512-5763-8100 / sales-cn@mecxtal.com

Part Number Format and Examples :

[1]	[2]	[3]	[4]	[5]	[6]
Voltage	Type G ---	Stability	Tri-state ---	Frequency ---	Customer spec.

[1]	Supply voltage , " ***18*** " for +1.8V ;" ***25*** " for +2.5V ; " ***28*** " for +2.8V ; " ***3*** " for +3.3V ; " ***5*** " for +5.0V
[2]	Please add " G " after the " package type code " for RoHS compliance (SWO , H53 , H32 , H_576_ , H_53 , H_32 are RoHS compliant and lead-free products)
[3]	Frequency Stability : please see previous page for the stability code [Frequency Stability (1)]
[4]	" T " for Tri-state. Omit "T" if Tri-State is not required
[5]	Frequency in MHz or KHz .
[6]	Option or custom spec. code : " ***S*** " for 50%± 5% duty cycle , "***50P***" for output load 50pF or "***xxxxx***" custom spec. code assigned by Mercury

Ex (1) : 3H14G - BT - 10.000 - S — represents +3.3V input voltage , full size 4 pins (dip type) package, RoHS compliance . ±50ppm stability from 0°C to 70°C , Tri-state function on pin # 1 , 10.000MHz , 50%± 5% duty cycle

Ex (2) : 5H44G - A -20.000 - 2315 — represents +5.0V input voltage , H44 package 4 pads SMD type , RoHS compliance , ±25ppm from -10°C to 70°C , No Tri-state option , 20.000MHz , custom spec. No. 2315

Ex (3) : 18SWO - C10T - 40.000 / -20+70 — represents +1.8V input voltage , SWO package 4 pads SMD type , ±10ppm from -20°C to 70°C Tri-state function on pad # 1 , 40.000MHz

T T L / HCMOS Square Wave Test Circuit

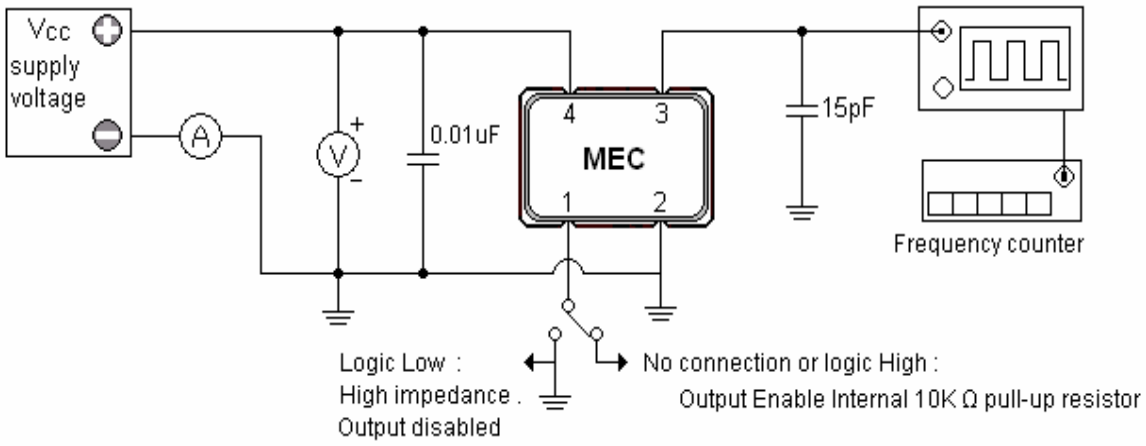

T T L / HCMOS Output Wave Form

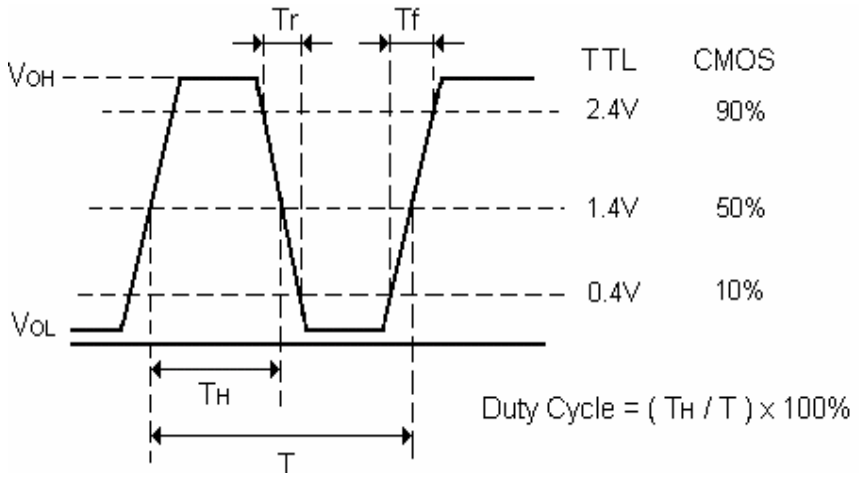

Outline Dimensions (Unit : mm) , Suggested pad Layout for SMDs

[H32]

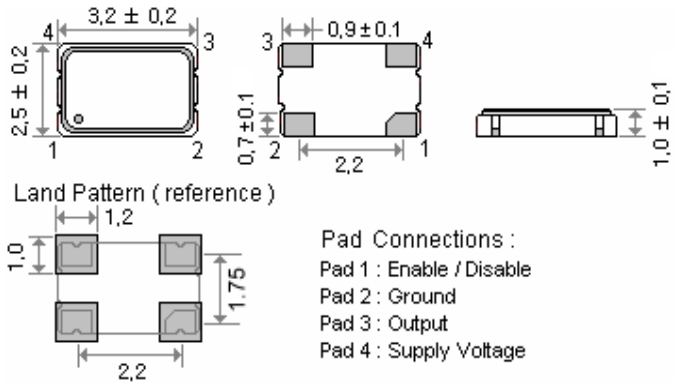

Pad Connections :
Pad 1 : Enable / Disable
Pad 2 : Ground
Pad 3 : Output
Pad 4 : Supply Voltage

[H_53]

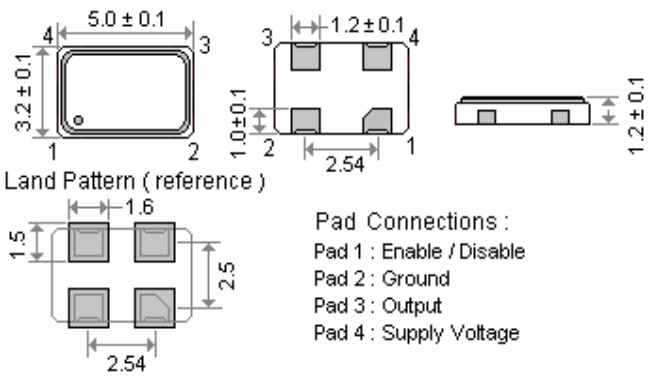

Pad Connections :
Pad 1 : Enable / Disable
Pad 2 : Ground
Pad 3 : Output
Pad 4 : Supply Voltage

[SWO] , [H_57]

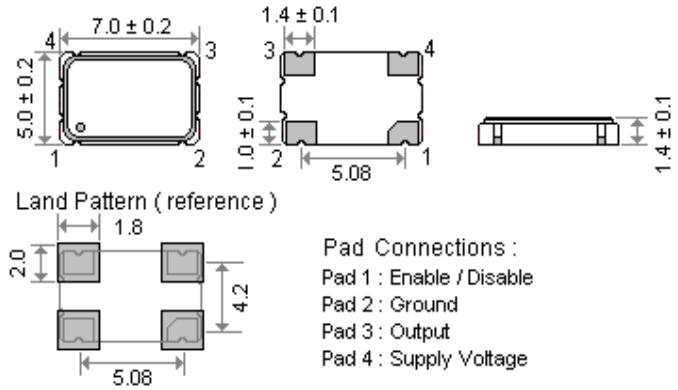

Pad Connections :
Pad 1 : Enable / Disable
Pad 2 : Ground
Pad 3 : Output
Pad 4 : Supply Voltage

[H42 , HF42 ,HW42 , HV42] , [H44 , HF44 , HW44 , HV44]

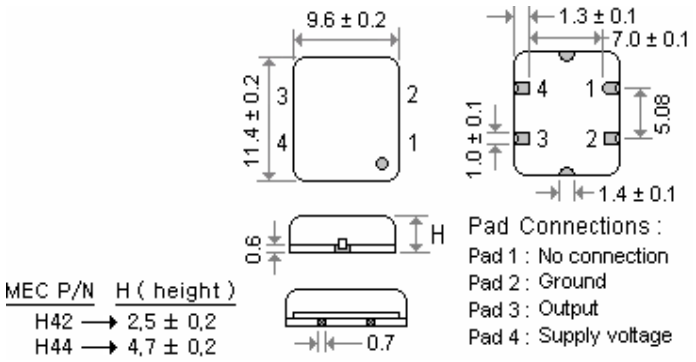

MEC P/N	H (height)
H42 ⟶	2,5 ± 0,2
H44 ⟶	4,7 ± 0,2

Pad Connections :
Pad 1 : No connection
Pad 2 : Ground
Pad 3 : Output
Pad 4 : Supply voltage

[HF5761 , HW5761]

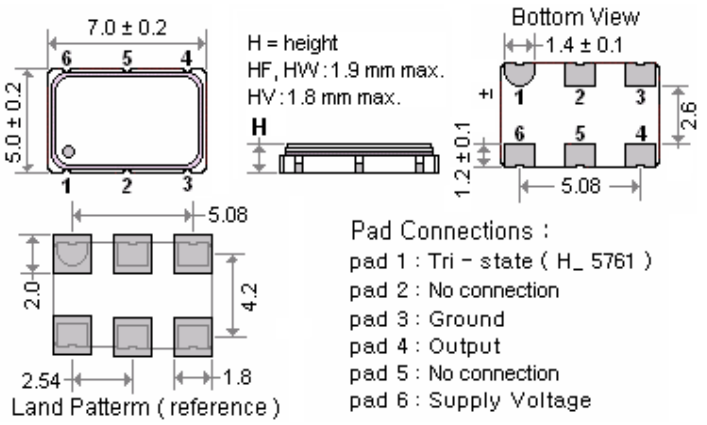

Pad Connections :
pad 1 : Tri - state (H_ 5761)
pad 2 : No connection
pad 3 : Ground
pad 4 : Output
pad 5 : No connection
pad 6 : Supply Voltage

[HF5762 , HW5762 , HV5762]

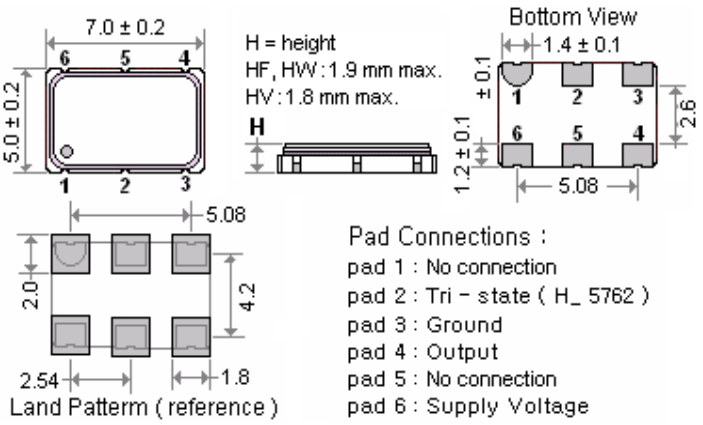

Pad Connections :
pad 1 : No connection
pad 2 : Tri - state (H_ 5762)
pad 3 : Ground
pad 4 : Output
pad 5 : No connection
pad 6 : Supply Voltage

[H14 , HF14 , HW14 , HV14]

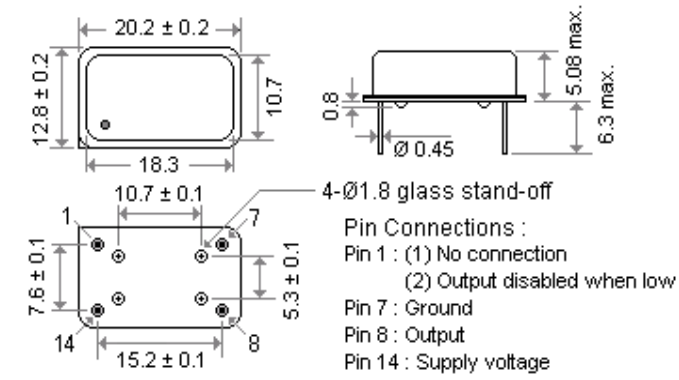

Pin Connections :
Pin 1 : (1) No connection
(2) Output disabled when low
Pin 7 : Ground
Pin 8 : Output
Pin 14 : Supply voltage

[H8 , HF8 , HW8 , HV8]

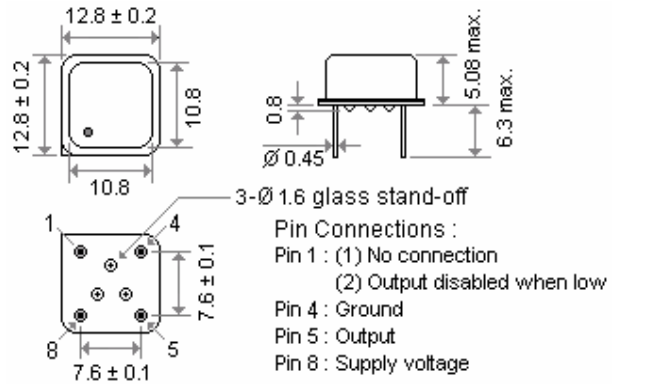

Pin Connections :
Pin 1 : (1) No connection
(2) Output disabled when low
Pin 4 : Ground
Pin 5 : Output
Pin 8 : Supply voltage