HD63701Y0, HD637A01Y0, HD637B01Y0

(Limiting Supplies. For Development Only.)

Description

The HD63701Y0 is a CMOS 8-bit single-chip microcomputer unit with 16k-byte EPROM, programmed by the same method as the standard 27256 EPROM. It is available in a ceramic package. The user-programmable on-chip EPROM reduces lead time between software development and production. The ceramic package with window is used in the debugging development stage and small volume production. The ceramic package is a hermetically sealed 64-pin shrink DIP with quartz window that allows for EPROM erasure in the same way as a 27256 EPROM.

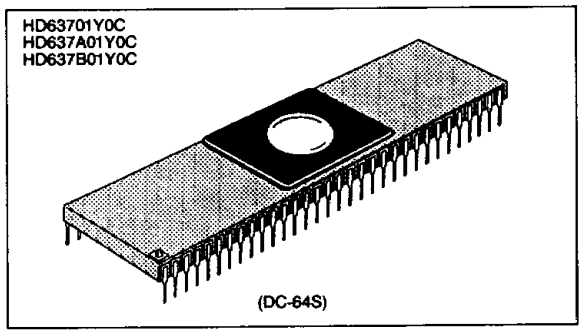

■ FEATURES

- Instruction set compatible with the HD6301Y0
- 16k bytes EPROM
- 256 bytes RAM
- 53 parallel I/O lines
- Parallel handshake interface (port 6)
- Darlington transistor direct drive lines (port 2) and port 6)
- 16-bit programmable timer
- 8-bit reloadable timer
- Serial communications interface (SCI)
- Three kinds of memory-ready function for low-speed memory access
- Halt function
- Error detection function (address error, opcode error)
- Interrupts
  —3 external
  —7 internal
- MCU operation modes
  —Mode 1: expanded mode (internal ROM inhibited)
  —Mode 2: expanded mode (internal ROM valid)
  —Mode 3: single-chip mode
- EPROM programming mode
- Address space up to 65k bytes
- Low power modes
  —Sleep mode
  —Standby mode
- Minimum instruction time 0.5 μs (f = 2 MHz)

■ PIN ARRANGEMENT

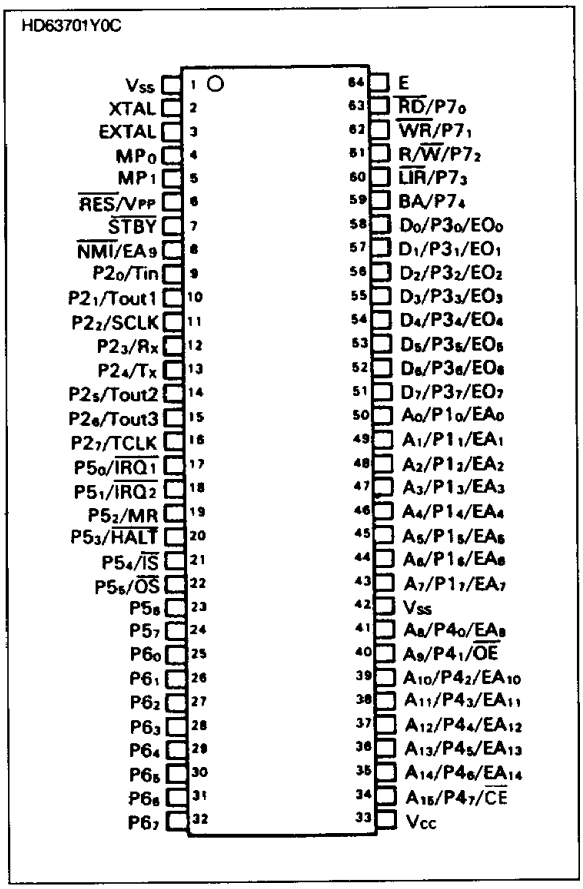

■ PROGRAM DEVELOPMENT SUPPORT TOOLS

- Cross assembler and C compiler software for IBM PC and compatibles
- In circuit emulator for use with IBM PCs and compatibles
- Programming socket adapter for programming the EPROM-on-chip device.

Part No.	Clock Freq. (MHz)	Package
HD63701Y0C	0.1 to 1.0	64-pin ceramic shrink DIP (DC-64S)
HD637A01Y0C	0.1 to 1.5	
HD637B01Y0C	0.1 to 2.0	

Block Diagram

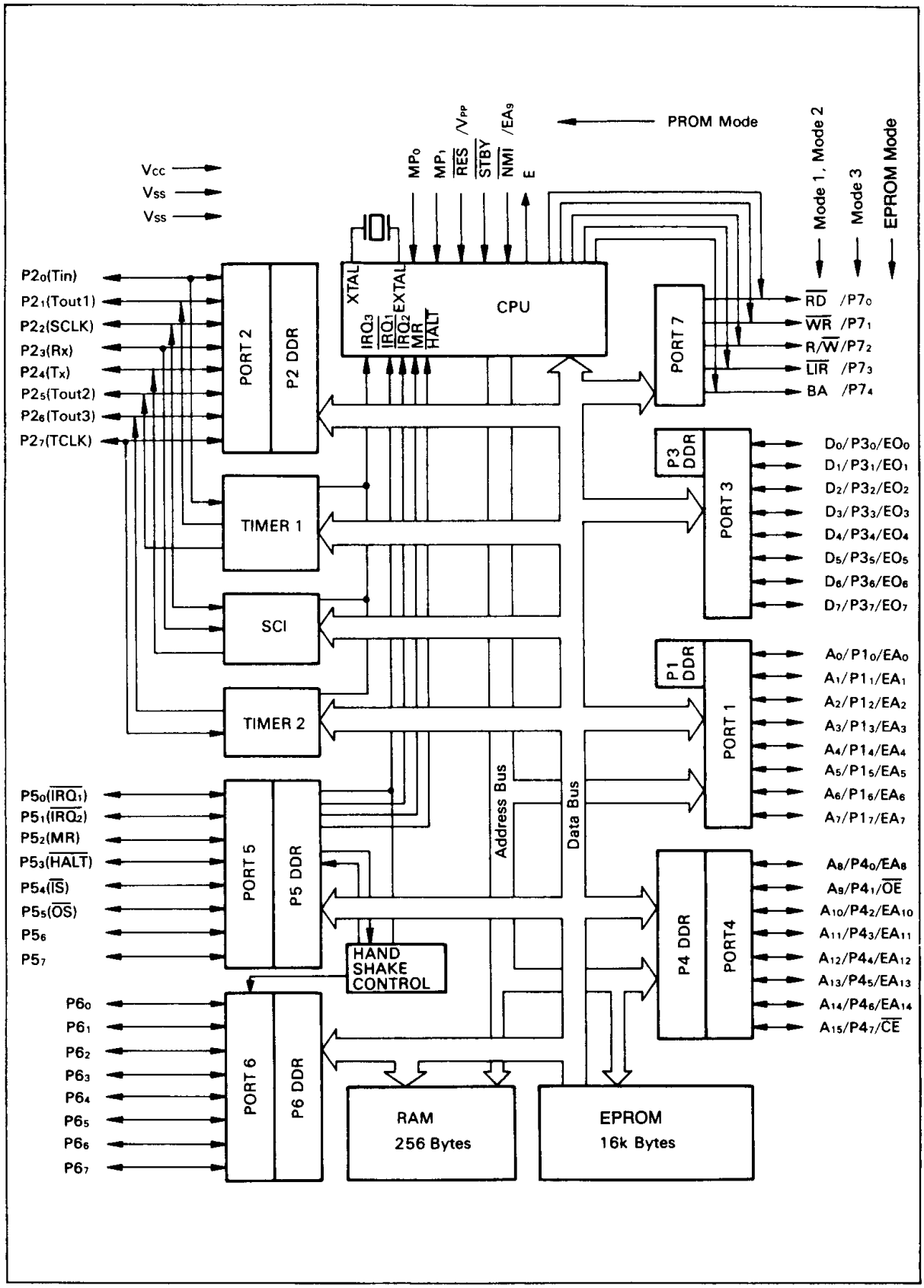

Pin Description

Pin No.	Mode 1, Mode 2		Mode 3		EPROM Mode	
DC-64S	Pin Name	Function	Pin Name	Function	Pin Name	Function
1	V_{SS}	Ground	V_{SS}	Ground	V_{SS}	Ground
2	XTAL	Crystal connection	XTAL	Crystal connection		
3	EXTAL	Crystal or external clock connection	EXTAL	Crystal or external clock connection		
4	MP_0	Mode select inputs	MP_0	Mode select inputs		
5	MP_1		MP_1			
6	$\overline{RES}$	Reset input	$\overline{RES}$	Reset input	V_{PP}	EPROM Programming voltage
7	$\overline{STBY}$	Standby mode input	$\overline{STBY}$	Standby mode input		
8	$\overline{NMI}$	Nonmaskable interrupt	$\overline{NMI}$	Nonmaskable interrupt	EA_9	Address bus, bit 9
9	$P2_0/T_{in}$	Port 2, bit 0/ Timer 1 input	$P2_0/T_{in}$	Port 2, bit 0/ Timer 1 input		
10	$P2_1/T_{out}$ 1	Port 2, bit 1/ Timer 1 output 1	$P2_1/T_{out}$ 1	Port 2, bit 1/ Timer 1 output 1		
11	$P2_2$/SCLK	Port 2, bit 2/ SCI clock	$P2_2$/SCLK	Port 2, bit 2/ SCI clock		
12	$P2_3/R_X$	Port 2, bit 3/ SCI receive input	$P2_3/R_X$	Port 2, bit 3/ SCI receive input		
13	$P2_4/T_X$	Port 2, bit 4/ SCI transmit output	$P2_4/T_X$	Port 2, bit 4/ SCI transmit output		
14	$P2_5/T_{out}$ 2	Port 2, bit 5/ Timer 1 output 2	$P2_5/T_{out}$ 2	Port 2, bit 5/ Timer 1 output 2		
15	$P2_6/T_{out}$ 3	Port 2, bit 6/ Timer 2 output 3	$P2_6/T_{out}$ 3	Port 2, bit 6/ Timer 2 output 3		
16	$P2_7$/TCLK	Port 2, bit 7/ Timer 2 clock	$P2_7$/TCLK	Port 2, bit 7/ Timer 2 clock		
17	$P5_0/\overline{IRQ_1}$	Port 5, bit 0/ Interrupt input 1	$P5_0/\overline{IRQ_1}$	Port 5, bit 0/ Interrupt input 1		
18	$P5_1/\overline{IRQ_2}$	Port 5, bit 1/ Interrupt input 2	$P5_1/\overline{IRQ_2}$	Port 5, bit 1/ Interrupt input 2		
19	$P5_2$/MR	Port 5, bit 2/ Memory ready input	$P5_2$	Port 5, bit 2		
20	$P5_3/\overline{HALT}$	Port 5, bit 3/ Halt input	$P5_3$	Port 5, bit 3		
21	$P5_4/\overline{IS}$	Port 5, bit 4/ Input strobe	$P5_4/\overline{IS}$	Port 5, bit 4/ Input strobe		
22	$P5_5/\overline{OS}$	Port 5, bit 5/ Output strobe	$P5_5/\overline{OS}$	Port 5, bit 5/ Output strobe		
23	$P5_6$	Port 5,	$P5_6$	Port 5,		
24	$P5_7$	bits 6 and 7	$P5_7$	bits 6 and 7		

(continued)

Pin Description (Cont)

Pin No.	Mode 1, Mode 2		Mode 3		EPROM Mode	
DC-64S	Pin Name	Function	Pin Name	Function	Pin Name	Function
25	$P6_0$	Port 6, bits 0-7	$P6_0$	Port 6, bits 0-7		
26	$P6_1$		$P6_1$			
27	$P6_2$		$P6_2$			
28	$P6_3$		$P6_3$			
29	$P6_4$		$P6_4$			
30	$P6_5$		$P6_5$			
31	$P6_6$		$P6_6$			
32	$P6_7$		$P6_7$			
33	V_{CC}	+5 V power supply	V_{CC}	+5 V power supply	V_{CC}	+5 V power supply
34	A_{15}	Address bus, bits 15-8	$P4_7$	Port 4, bits 7-0	$\overline{CE}$	Chip enable
35	A_{14}		$P4_6$		EA_{14}	Address bus, bits 14-10
36	A_{13}		$P4_5$		EA_{13}	
37	A_{12}		$P4_4$		EA_{12}	
38	A_{11}		$P4_3$		EA_{11}	
39	A_{10}		$P4_2$		EA_{10}	
40	A_9		$P4_1$		$\overline{OE}$	Output enable
41	A_8		$P4_0$		EA_8	Address bus, bit 8
42	V_{SS}	Ground	V_{SS}	Ground	V_{SS}	Ground
43	A_7	Address bus, bits 7-0	$P1_7$	Port 1, bits 7-0	EA_7	Address bus, bits 7-0
44	A_6		$P1_6$		EA_6	
45	A_5		$P1_5$		EA_5	
46	A_4		$P1_4$		EA_4	
47	A_3		$P1_3$		EA_3	
48	A_2		$P1_2$		EA_2	
49	A_1		$P1_1$		EA_1	
50	A_0		$P1_0$		EA_0	
51	D_7	Data bus, bits 7-0	$P3_7$	Port 3, bits 7-0	EO_7	Data bus, bits 7-0
52	D_6		$P3_6$		EO_6	
53	D_5		$P3_5$		EO_5	
54	D_4		$P3_4$		EO_4	
55	D_3		$P3_3$		EO_3	
56	D_2		$P3_2$		EO_2	
57	D_1		$P3_1$		EO_1	
58	D_0		$P3_0$		EO_0	
59	BA	Bus available output	$P7_4$	Port 7, bits 4-0		
60	$\overline{LIR}$	Load instruction register output	$P7_3$			
61	$R/\overline{W}$	Read/Write output	$P7_2$			
62	$\overline{WR}$	Write output	$P7_1$			
63	$\overline{RD}$	Read output	$P7_0$			
64	E	External clock output	E	External clock output		

Pin Function

Power (V_{CC}, V_{SS})

V_{CC} and V_{SS} are the power supply pins. Apply +5V ±10% to V_{CC}. Connect the V_{SS} pins to ground.

Clock (XTAL, EXTAL)

XTAL and EXTAL connected to an AT-cut parallel resonant crystal supply the system clock. The chip has a divide-by-four circuit. For example, if a 4 MHz crystal is used, the system clock will be 1 MHz.

Figure 1 is an example of the crystal oscillator connection. The crystal and C_{L1} and C_{L2} should be located as close as possible to the XTAL and EXTAL pins. No line must cross the lines between the crystal oscillator and the XTAL and EXTAL pins.

The EXTAL pin can be driven by an external clock with a 45% to 55% duty cycle. The LSI divides the external clock frequency by foru. The external clock should therefore be less than four times the maximum clock frequency. When using an external clock, the XTAL pin should be left open.

Enable Clock (E)

E provides a system clock to external circuits. Its frequency is one-fourth that of the crystal oscillator or external clock.

Reset ($\overline{RES}$)

This pin resets the MCU's internal state and initiates a startup procedure.

Nonmaskable Interrupt ($\overline{NMI}$)

When CPU detects a falling edge at the $\overline{NMI}$ input, it begins the internal nonmaskable interrupt sequence. The instruction being executed when the $\overline{NMI}$ is detected will proceed to completion. The interrupt mask bit of the condition code register does not affect the nonmaskable interrupt.

Interrupt Requests ($\overline{IRQ_1}$, $\overline{IRQ_2}$)

The interrupt requests are level-sensitive inputs which request an internal interrupt sequence from the CPU.

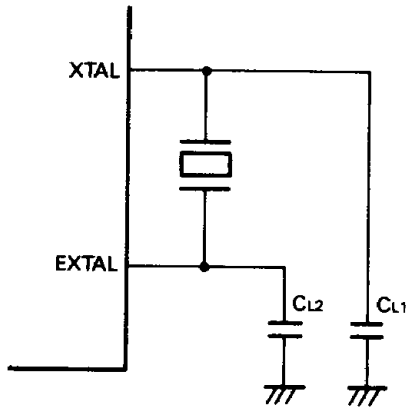

AT Cut Parallel Resonant Crystal Oscillator

Frequency (MHz)	2.5	4.0	6.0	8.0
Rs max (Ω)	500	120	80	60
Co max (pF)	7.0			

$C_{L1} = C_{L2} = 10$ pF to 22 pF ±20%

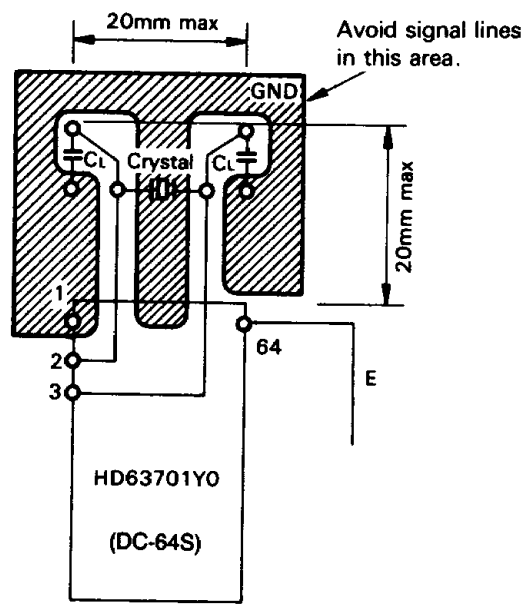

Figure 1. Recommended Crystal Oscillator Connection

Mode Program (MP_0, MP_1)

These pins determine the MCU operation mode (expanded modes 1 or 2, or single-chip mode 3).

Standby ($\overline{STBY}$)

The $\overline{STBY}$ pin puts the MCU in standby mode.

Halt ($\overline{HALT}$)

The halt control input stops instruction execution and release the buses. When $\overline{HALT}$ switches low, the CPU finishes the current instruction, then stops and enters the halt state.

Memory Ready (MR)

The memory ready control input lengthens the system clock's high period to allow access to low-speed memory.

Read and Write ($\overline{RD}$, $\overline{WR}$)

The read and write outputs show active low outputs to peripherals or memories when the CPU is reading or writing.

Read/Write ($R/\overline{W}$)

The read/write signal is high when the CPU is reading, and low when it is writing to peripherals or memory.

Load Instruction Register ($\overline{LIR}$)

The $\overline{LIR}$ output is low when the CPU executes an opcode fetch cycle.

Bus Available (BA)

The bus available output control signal goes high when the CPU accepts $\overline{HALT}$ and releases the buses. It is normally low.

Input Handshake, Output Handshake ($\overline{IS}$, $\overline{OS}$)

$\overline{IS}$ and $\overline{OS}$ are the handshake interface input and output.

Timer 1 Input (Tin)

Tin is the external input-capture pin for timer 1.

Timer 1 Outputs 1 and 2 (Tout1, Tout2)

Tout1 and Tout2 are the outputs of timer 1's output compare registers.

Timer 2 Output (Tout3)

Tout3 is the output for timer 2.

Timer 2 Clock Input (TCLK)

TCLK is timer 2's external clock input.

SCI Clock (SCLK)

SCLK is the serial communication interface (SCI) I/O pin.

Receive, Transmit (Rx, Tx)

Rx and Tx are the SCI receive input and transmit output.

Port 1 ($P1_0$-$P1_7$)

In mode 3 (single-chip mode), these pins are an 8-bit I/O port.

Port 2 ($P2_0$-$P2_7$)

Port 2 is an 8-bit I/O port.

Port 3 ($P3_0$-$P3_7$)

In mode 3 (single-chip mode), these pins are an 8-bit I/O port.

Port 4 ($P4_0$-$P4_7$)

In mode 3 (single-chip mode), these pins are an 8-bit I/O port.

Port 5 ($P5_0$-$P5_7$)

Port 5 is an 8-bit I/O port.

Port 6 ($P6_0$-$P6_7$)

Port 6 is an 8-bit I/O port.

Port 7 ($P7_0$-$P7_4$)

In mode 3 (single-chip mode), port 7 is a 5-bit output port.

Address Bus (A_0-A_{15})

In modes 1 and 2 (expanded modes), these pins are the 16-bit address bus.

Data Bus (D_0-D_7)

In modes 1 and 2 (expanded modes), these pins are the 8-bit data bus.

Chip Enable ($\overline{CE}$)

The chip enable input enables EPROM programming and verifying. When this signal is low, the EPROM is enabled.

Program Voltage (V_{PP})

V_{PP} is the input for the program voltage (12.5V ± 0.3V) for programming the EPROM.

Output Enable ($\overline{OE}$)

$\overline{OE}$ is the control for data verification output.

EPROM Address Bus (EA_0–EA_{14})

In the PROM programming mode, EA_0-EA_{14} are the PROM address bus.

EPROM Data Bus (EA_0–EA_7

In the PROM programming mode, EO_0-EO_7 are the PROM data bus.

Functional Description

CPU

Registers : Figure 2 is the HD63701Y0 register programming model. The double accumulator D consists of accumulators A and B, so using accumulator D destroys the contents of A and B.

CPU Operation Modes : When active, the CPU fetches an instruction from a memory location and executes it. This sequence starts when reset is cancelled, and repeats if not affected by a special instruction (such as SWI, RTI, WAI, or SLP), or control signal (such as $\overline{NMI}$, $\overline{IRQ_1}$, $\overline{IRQ_2}$, IRQ_3, $\overline{HALT}$, or $\overline{STBY}$). Other than the active mode, the CPU can be in the reset mode, the halt mode, or either of the low power dissipation modes, sleep or standby. Figure 3 shows the operation mode transitions, and figure 4 is a flow chart of the transition control. Table 1 shows the CPU operating states and port states.

Table 1. CPU Operation and Port States

Port	Mode	Reset	STBY [4]	HALT [3]	Sleep
Port 1	Mode 1, 2	High	High Z	High Z	High
(A_0 to A_7)	Mode 3	High Z			Keep
Port 2	Mode 1, 2	High Z	High Z	Keep	Keep
	Mode 3				
Port 3	Mode 1, 2	High Z	High Z	High Z	High Z
(D_0 to D_7)	Mode 3				Keep
Port 4	Mode 1	High	High Z	High Z	High
(A_8 to A_{15})	Mode 2	High Z			Note 5
	Mode 3				Keep
Port 5	Mode 1, 2	High Z	High Z	Keep	Keep
	Mode 3				
Port 6	Mode 1, 2	High Z	High Z	Keep	Keep
	Mode 3				
Port 7	Mode 1, 2	Note 1	High Z	Note 2	Note 1
	Mode 3	High Z			Keep

Notes :
1. $\overline{RD}$, $\overline{WR}$, R/$\overline{W}$, $\overline{LIR}$=High, BA=Low
2. $\overline{RD}$, $\overline{WR}$, R/$\overline{W}$=High Z, $\overline{LIR}$, BA=High
3. HALT is unacceptable in mode 3.
4. E pin goes to high impedance state.
5. Address output pin=High
   Input port=High Z
6. Keep: The output port is retained, and the input port goes to the high impedance state.

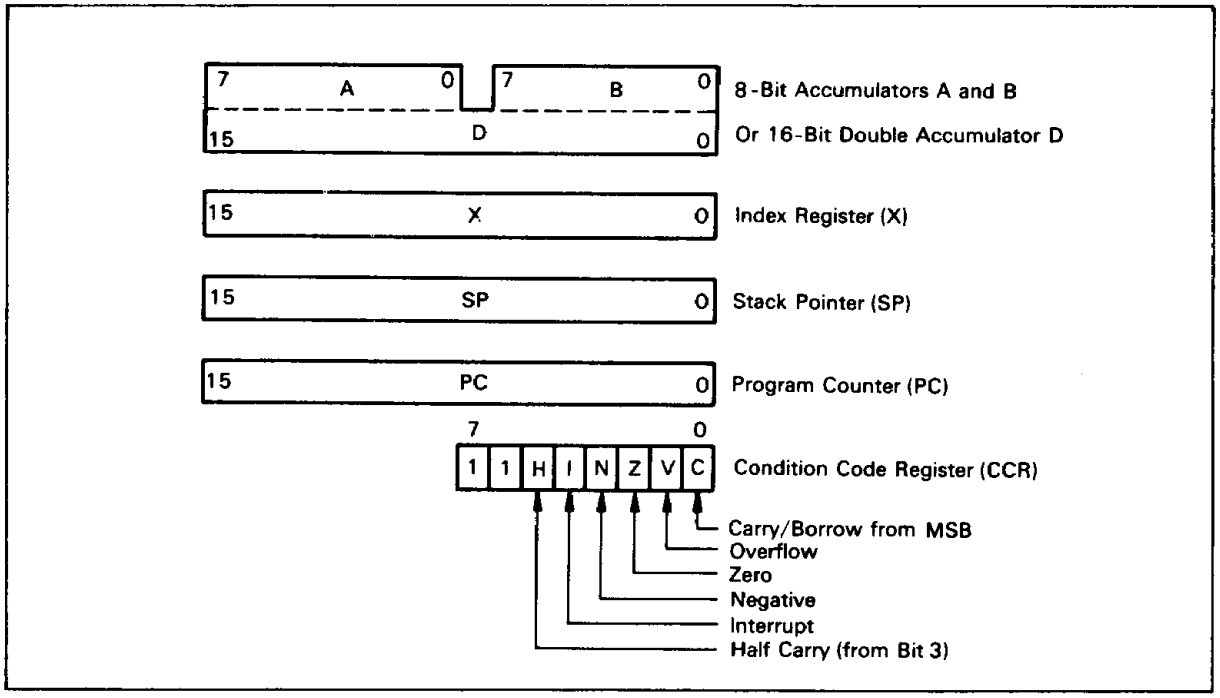

Figure 2. CPU Registers

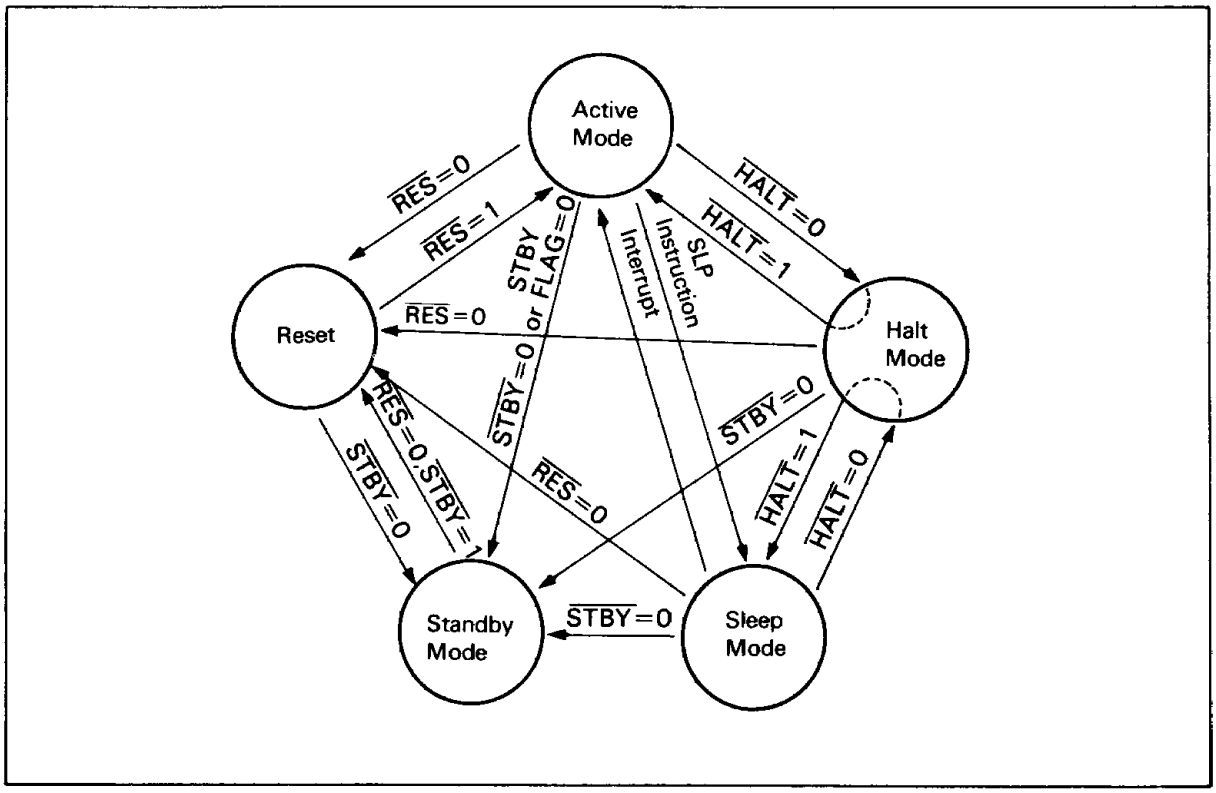

Figure 3. CPU Operation Mode Transitions

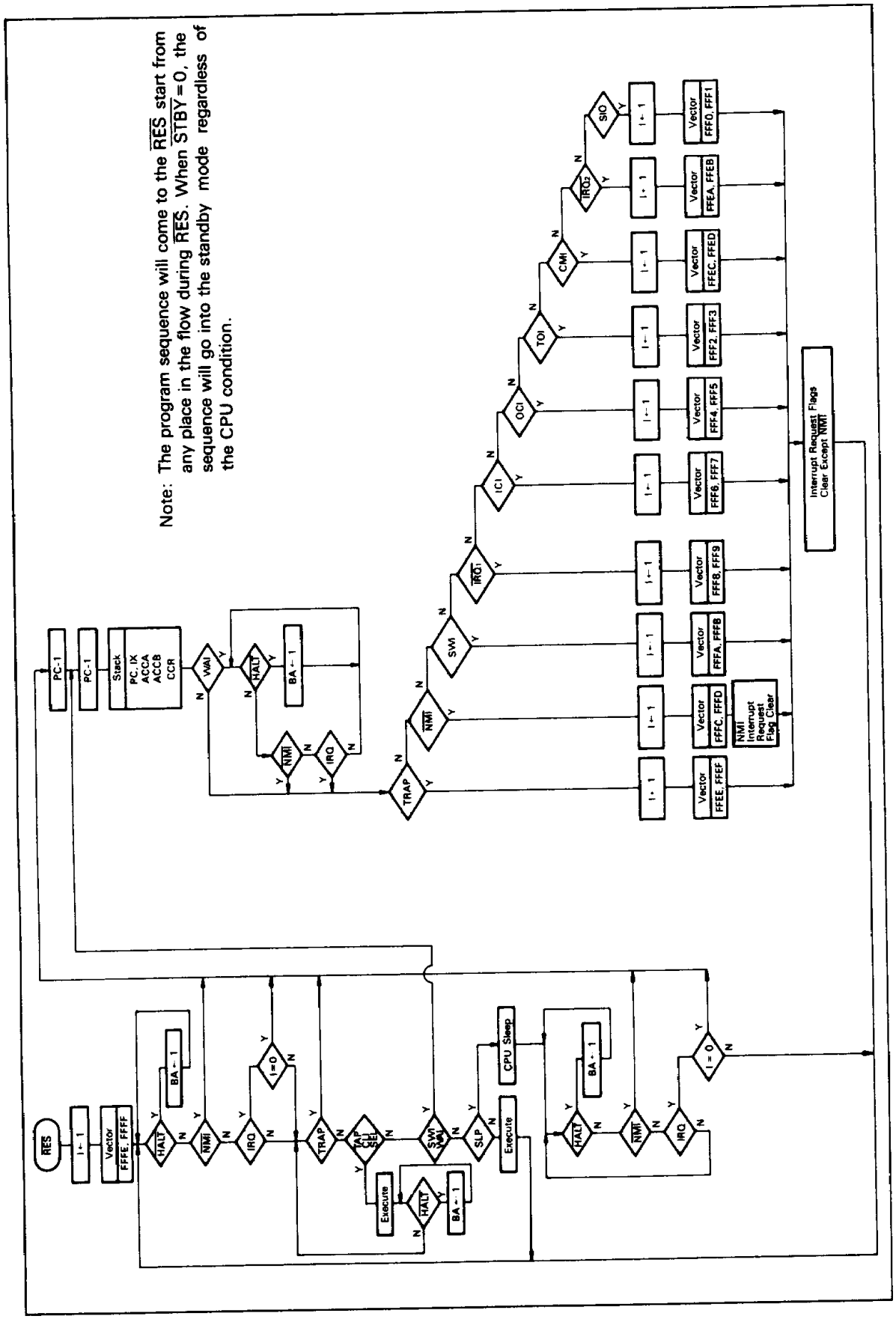

Figure 4. System Flowchart

Reset Mode : To reset the MCU, hold $\overline{RES}$ low for at least 3 clock cycles during operation, or for at least 20 ms during power-up. When $\overline{RES}$ is brought high, the MCU begins the reset procedure :

Table 2. Registers at Reset

Address	Register	Abbreviation	R/W [2]	Value at Reset [3]
00	Port 1 DDR (Data Direction Register)	P1DDR	W	$FE
01	Port 2 DDR	P2DDR	W	$00
02	Port 1	PORT1	R/W	Indefinite
03	Port 2	PORT2	R/W	Indefinite
04	Port 3 DDR	P3DDR	W	$FE
05	Port 4 DDR	P4DDR	W	$00
06	Port 3	PORT3	R/W	Indefinite
07	Port 4	PORT4	R/W	Indefinite
08	Timer Control/Status Register 1	TCSR1	R/W	$00
09	Free Running Counter (MSB)	FRCH	R/W	$00
0A	Free Running Counter (LSB)	FRCL	R/W	$00
0B	Output Compare Register 1 (MSB)	OCR1H	R/W	$FF
0C	Output Compare Register 1 (LSB)	OCR1L	R/W	$FF
0D	Input Capture Register (MSB)	ICRH	R	$00
0E	Input Capture Register (LSB)	ICRL	R	$00
0F	Timer Control/Status Register 2	TCSR2	R/W	$10
10	Rate/Mode Control Register	RMCR	R/W	$C0
11	T_X/R_X Control Status Register 1	TRCSR1	R/W	$20
12	Receive Data Register	RDR	R	$00
13	Transmit Data Register	TDR	W	Indefinite
14	RAM/Port 5 Control Register	RP5CR	R/W	$F8 or $78
15	Port 5	PORT5	R/W	Indefinite
16	Port 6 DDR	P6DDR	W	$00
17	Port 6	PORT6	R/W	Indefinite
18	Port 7	PORT7	R/W	Indefinite
19	Output Compare Register 2 (MSB)	OCR2H	R/W	$FF
1A	Output Compare Register 2 (LSB)	OCR2L	R/W	$FF
1B	Timer Control/Status Register 3	TCSR3	R/W	$20
1C	Time Constand Register	TCONR	W	$FF
1D	Timer 2 Up Counter	T2CNT	R/W	$00
1E	T_X/R_X Control Status Register 2	TRCSR2	R/W	$28
1F	Reserved (Note 1)	TSTREG	—	—
20	Port 5 DDR	P5DDR	W	$00
21	Port 6 Control/Status Register	P6CSR	R/W	$07
22	Reserved	—	—	—
23	Reserved	—	—	—
24	Reserved	—	—	—
25	Reserved	—	—	—
26	Reserved	—	—	—
27	Reserved	—	—	—

Notes : 1. Test register. Don't access this register.
2. R : Read-only register, W : Write-only register, R/W : Read/write register.
3. Unused bits set to 1.

1. Latch the value of the port mode program pins (MP_0, MP_1)
2. Initialize the internal registers (table 2)
3. Set the interrupt mask bit
4. Put the contents of the last two addresses ($FFFE, FFFF) into the program counter (start address) and start the program from this address.

Halt Mode : When the $\overline{HALT}$ signal is low, the CPU will be in halt mode. In halt mode, the CPU does not execute instructions, and address and data buses are released.

- Internal clocks do not stop
- Peripherals (timer, SCI, etc) function
- Interrupts are accepted

Table 1 shows the state of each port. Halt mode is released when $\overline{HALT}$ goes high. A $\overline{RES}$ or $\overline{STBY}$ signal also releases the halt mode and put the CPU into reset or standby modes, respectively.

Sleep Mode : The SLP instruction causes the CPU to stop operation and go into sleep mode. In sleep mode, power dissipation is one-fifth of that in the active mode.

- Internal clocks stop
- Register contents are retained
- Peripherals function
- Interrupts are accepted

Table 1 shows the state of each port. Sleep mode is released by a $\overline{RES}$, $\overline{STBY}$, or interrupt. After being released, the CPU goes to reset, standby, or interrupt, respectively.

Standby Mode : The MCU goes to standby mode when the $\overline{STBY}$ signal goes low, or when the STBY flag in the RAM/port 5 control register (RP5CR : $0014) is cleared by software (figure 5). In standby mode, power dissipation is reduced to several μA.

- All clocks stop
- MCU goes to reset state
- RAM contents are retained

Table 1 shows the state of each port. Reset releases standby mode.

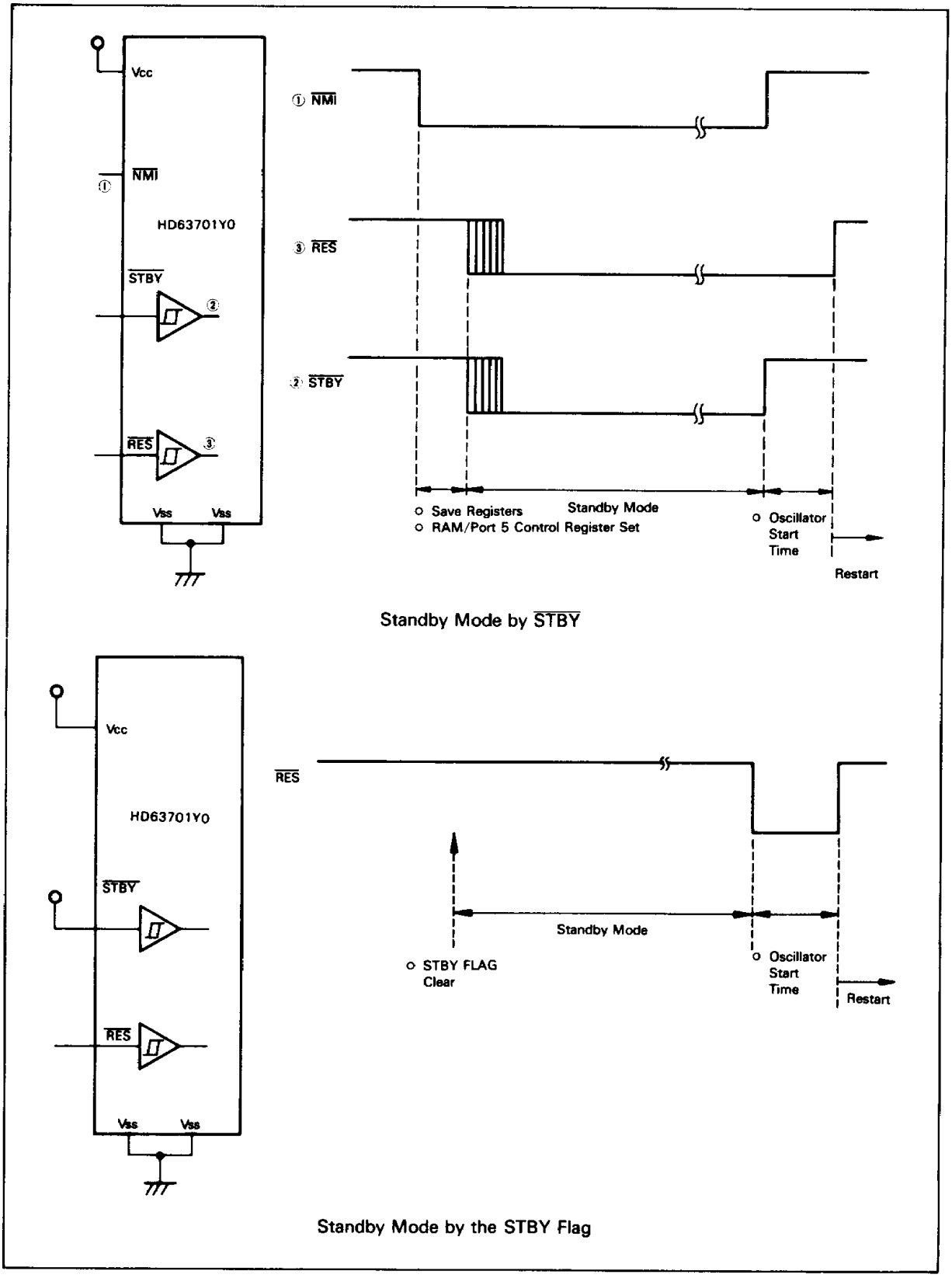

Figure 5. Standby Mode Timing

Interrupts

The HD63701Y0 provides 3 external and 7 internal interrupts (figure 6, table 3). At an interrupt request, the CPU will complete the current instruction before beginning the interrupt sequence. The MCU pushes the program counter, index register, accumulator, and condition code register onto the stack. Then the CPU sets the interrupt mask bit. Finally, it fetches the interrupt's vector (table 4) and branches to the interrupt routine that begins at the vector address.

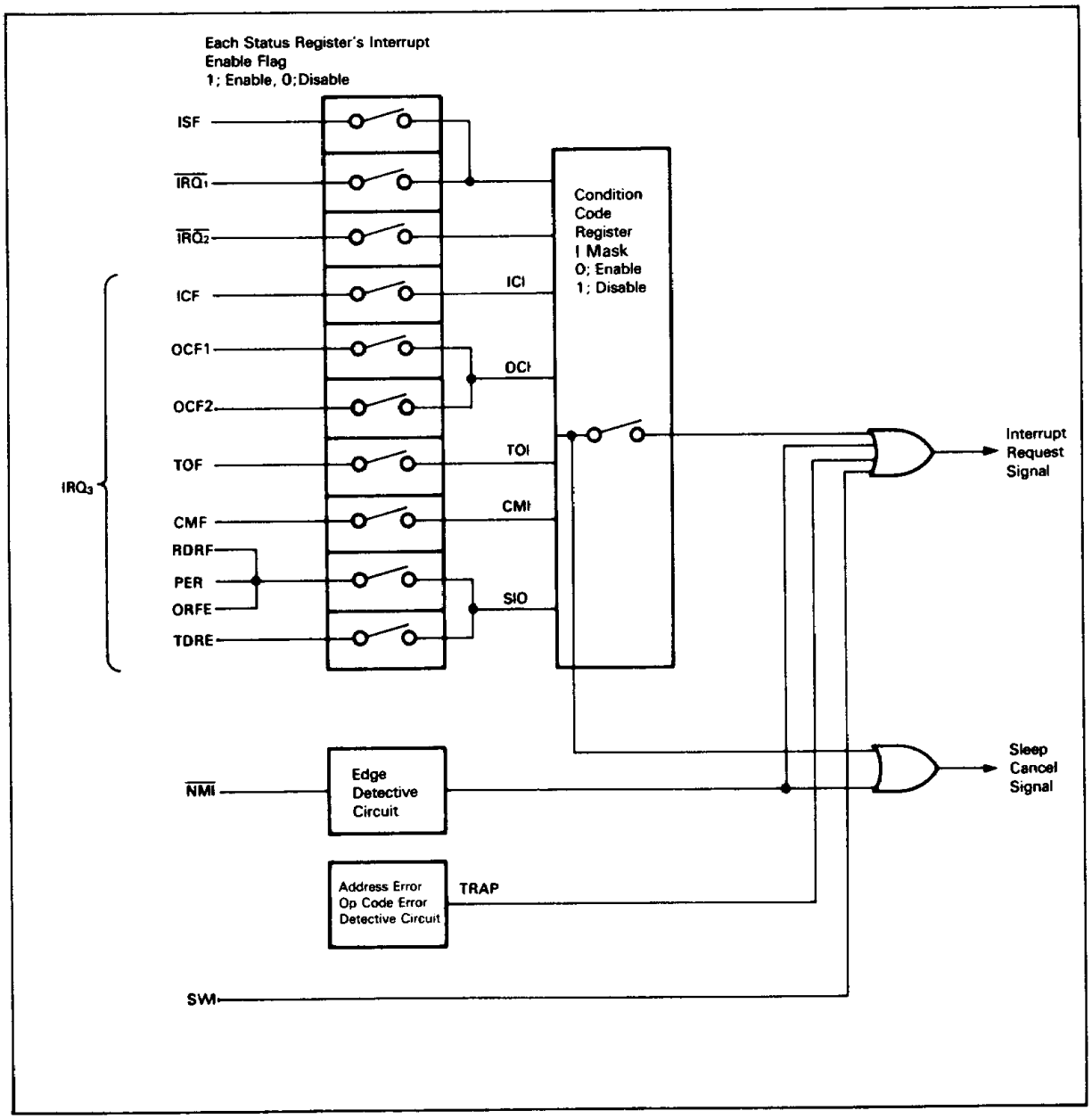

Figure 6. Interrupt Block Diagram

Table 3. Interrupt Sources

Type	Interrupt	Symbol	Description
External	Nonmaskable interrupt	$\overline{NMI}$	Generated by falling edge of $\overline{NMI}$ signal. Accepted regardless of interrupt mask bit.
	Interrupt request 1, 2	$\overline{IRQ_1}$, $\overline{IRQ_2}$	Generated by low level at $\overline{IRQ_1}$, $\overline{IRQ_2}$ pins.
	Port 6 input strobe	ISF	Generated by IS
Soft	Software interrupt	SWI	Generated by interrupt instruction
	Trap	TRAP	Generated by fetching undefined instruction or request
Timer	Timer 1 input capture	ICI	The timer and serial interrupts generate the internal interrupt IRQ_3
	Timer 1 output compare	OCI	
	Timer 1 overflow	TOI	
	Timer 2 counter match	CMI	
Serial	Serial Interrupt	SCI	

Table 4. Interrupt Vectors

Priority	Vector MSB	Vector LSB	Interrupt	kind
Highest	FFFE	FFFF	$\overline{RES}$	—
↑	FFEE	FFEF	TRAP	Soft
	FFFC	FFFD	$\overline{NMI}$	External
	FFFA	FFFB	SWI (Software interrupt)	Soft
	FFF8	FFF9	$\overline{IRQ_1}$, ISF (Port 6 input strobe)	External
	FFF6	FFF7	ICI (Timer 1 input capture)	Timer
	FFF4	FFF5	OCI (Timer 1 output compare 1, 2)	Timer
	FFF2	FFF3	TOI (Timer 1 overflow)	Timer
	FFEC	FFED	CMI (Timer 2 counter match)	Timer
↓	FFEA	FFEB	$\overline{IRQ_2}$	External
Lowest	FFF0	FFF1	SIO (RDRF+ORFE+TDRE+PER)	Serial

Memory Ready

When MR is high, the system clock operates normally. But when MR is low, the high period will be lengthened depending on its low time in integral multiples of its cycle time. It can be lengthened up to 9 μs. The one of three memory ready functions can be chosen by the MRE and AMRE bits in the RAM/port 5 control register (figure 7). See RAM/port 5 control register for details.

During internal address or invalid memory access, MR is prohibited internally from decreasing operation speed. Even in the halt state, MR can lengthen the high period of the system clock to allow peripheral devices to access low-speed memories. MR is also used as $P5_2$.

Trap

The CPU generates an internal interrupt with the highest priority, TRAP, when it tries to fetch an undefined instruction or address. At a TRAP, the CPU pushes the internal registers onto the stack and restarts from $FFEE, $FFEF.

The TRAP prevents the system from failing due to noise or program error. Which addresses are undefined depend on the port mode (table 5).

Table 5. Undefined Address Space

Mode 1	Mode 2	Mode 3
$0000 to $0027	$0000 to $0027	$0000 to $003F, $0140 to $BFFF

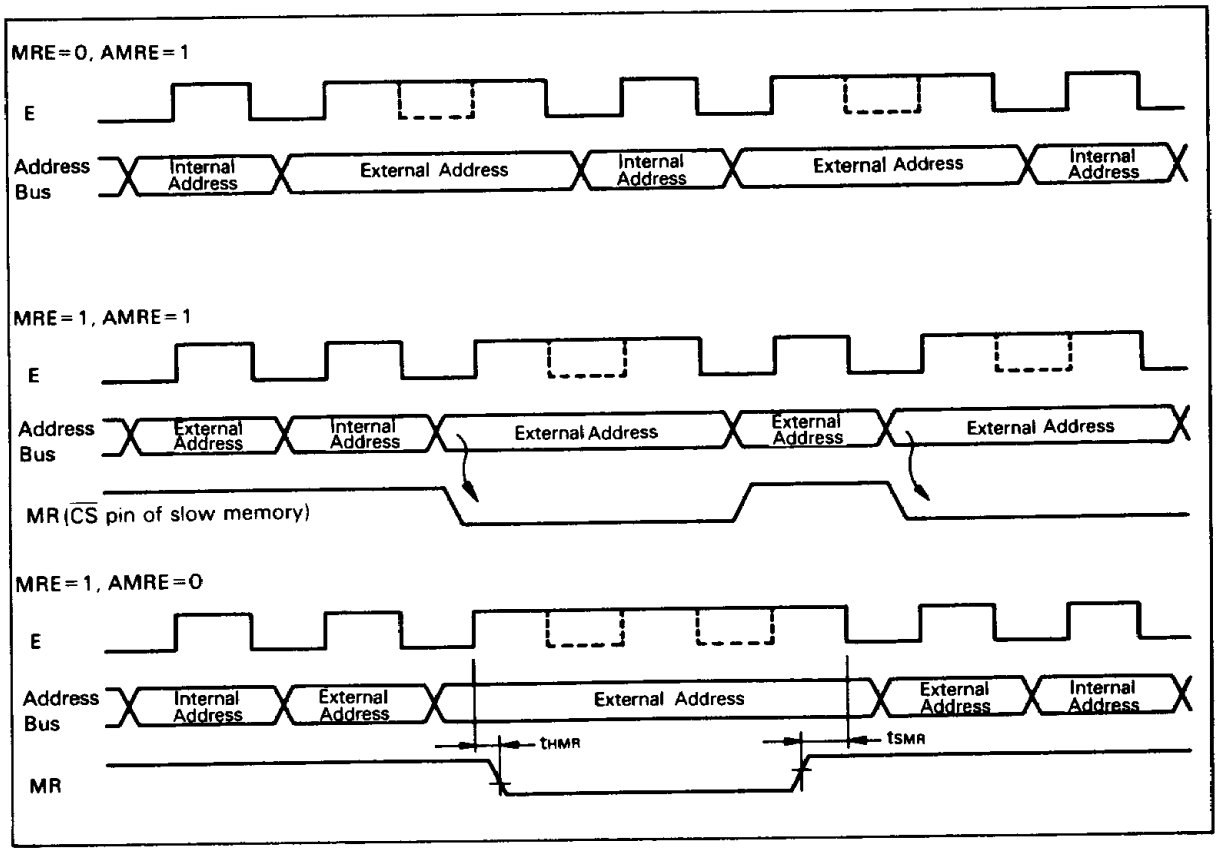

Figure 7. Memory Ready Timing

Port Mode Selection

The mode program pins, MP_0 and MP_1, determine the operation mode of the MCU as shown in table 6. These modes allow for either external memory access (expanded modes) or more I/O ports (single-chip mode). Table 7 and figure 8 show how the ports are used in the 3 modes.

Mode 1 (Expanded) : In mode 1, port 3 is the data bus. Port 1 is the lower address bus and port 4 is the upper address bus. These buses interface directly with the HMCS6800 buses. Port 7 is used for control signals. In mode 1, on-chip ROM is disabled, and external address space is expandable up to 65k bytes.

Mode 2 (Expanded) : In mode 2, on-chip ROM is available. External address space is expandable to 48k dytes. Port 3 is the data bus. Port 1 is the lower address bus and port 4 can be either the upper address bus or an input port.

Mode 3 (Single Chip) : In mode 3, all ports are available for I/O. No external memory can be accessed.

Table 6. Mode Selection

Mode	MP_1	MP_0	ROM	RAM	Interrupt Vector
1 (Expanded)	Low	High	Ext	Int*	Ext
2 (Expanded)	High	Low	Int	Int*	Int
3 (Single chip)	High	High	Int	Int	Int

Note : *External RAM can be addressed by clearing the RAME bit in RP5CR ($0014).

Table 7. Ports in Each Mode

Port	Mode 1	Mode 2	Mode 3
1	Address Bus (A_0—A_7)	Address Bus (A_0—A_7)	I/O Port
2	I/O Port	I/O Port	I/O Port
3	Data Bus (D_0—D_7)	Data Bus (D_0—D_7)	I/O Port
4	Address Bus (A_8—A_{15})	I/O Port or Address Bus (A_8—A_{15})	I/O Port
5	I/O Port	I/O Port	I/O Port
6	I/O Port	I/O Port	I/O Port
7	$\overline{RD}$, $\overline{WR}$, R/$\overline{W}$, $\overline{LIR}$, BA	$\overline{RD}$, $\overline{WR}$, R/$\overline{W}$, $\overline{LIR}$, BA	Output Port

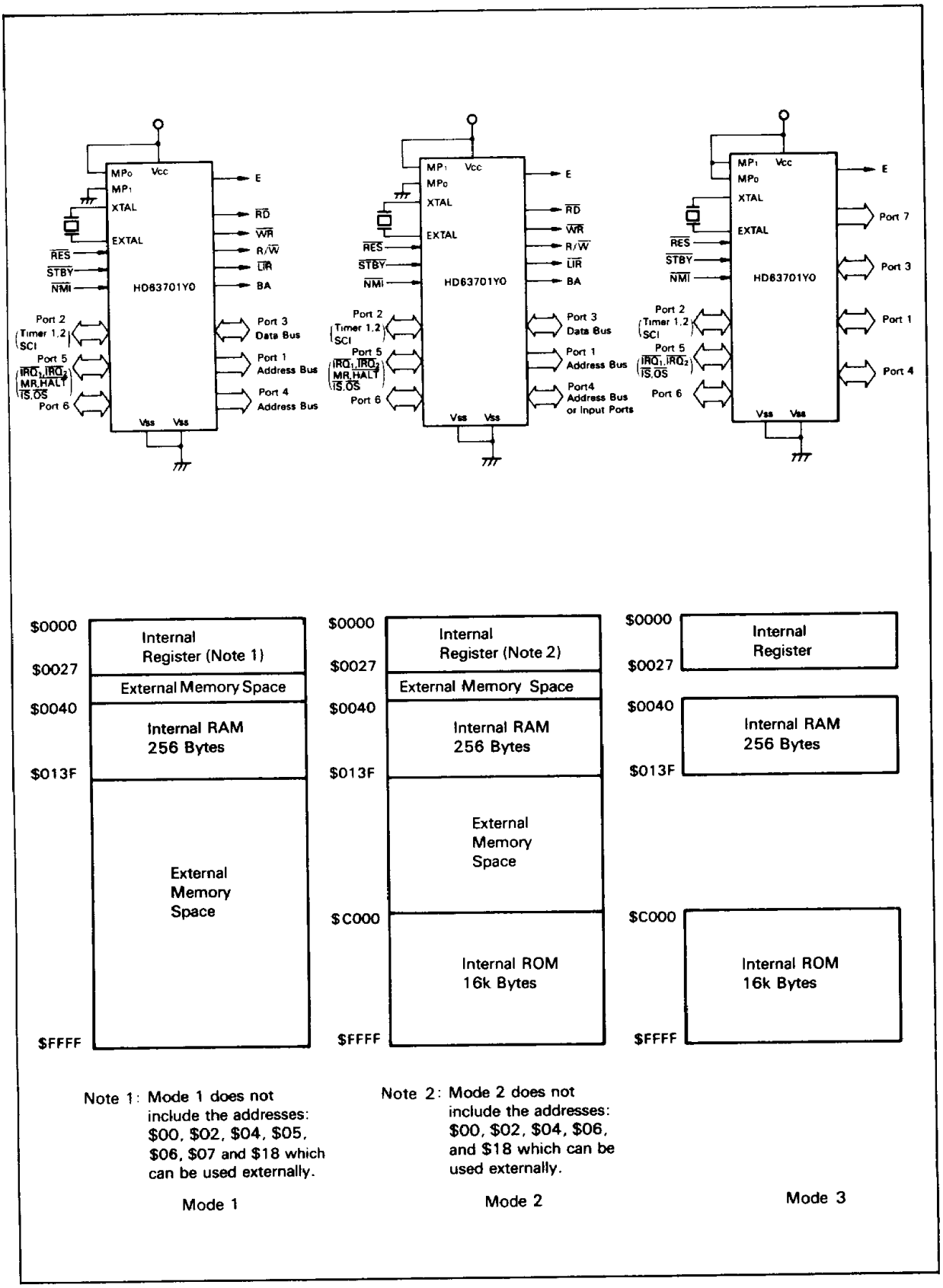

Figure 8. Operation Mode Pin Function and Memory Map

Ports

The HD63701Y0 provides six 8-bit I/O ports and one 5-bit output-only port. Each I/O port has a data direction register (DDR) which controls the direction of the port (0=input, 1=output). The DDRs are cleared at reset, and the I/O ports all become input ports.

Port 1 : Port 1 is an 8-bit I/O port (figure 9). The LSB of the DDR ($0000) selects the data direction of the whole port (Figure 10). In the expanded modes (1 and 2) port 1 is the lower address bus (A_7- A_0). Port 1 can drive one TTL load and 90 pF capacitance.

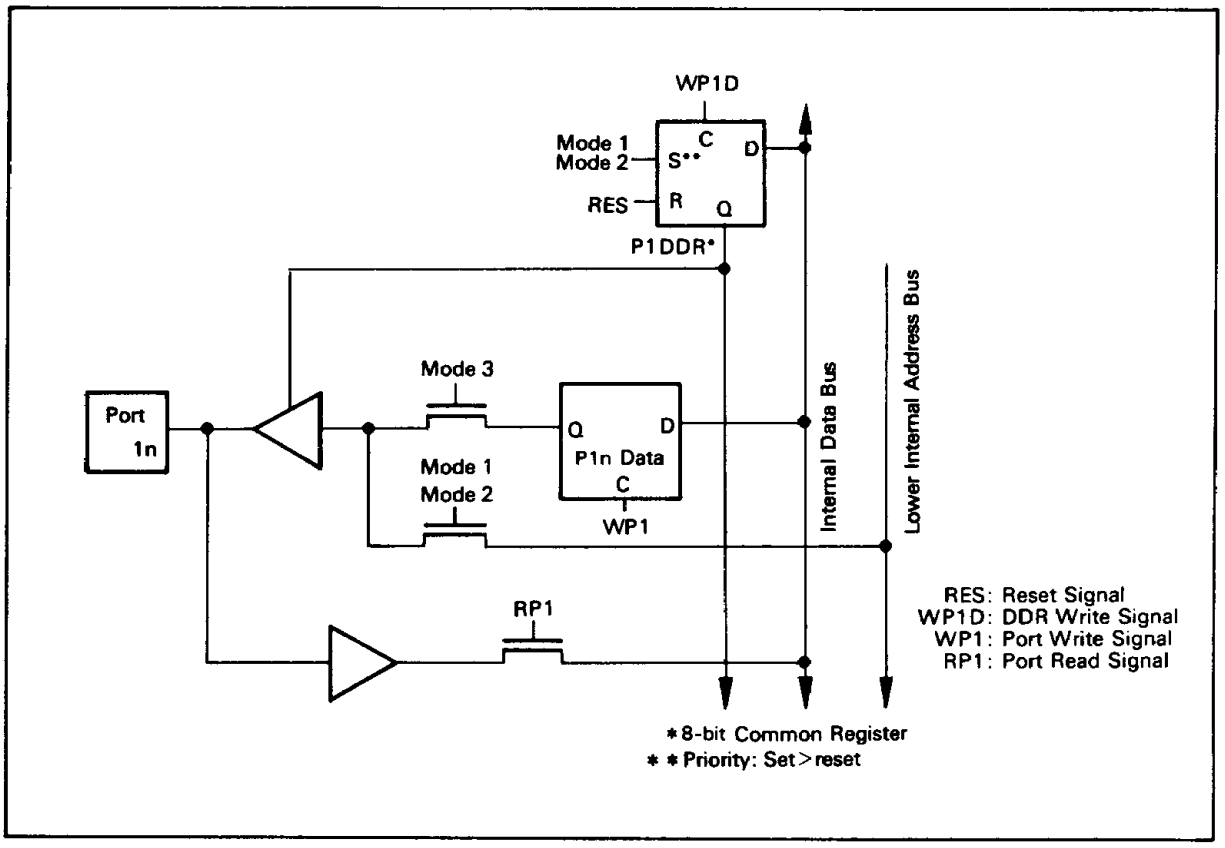

Figure 9. Port 1 Block Diagram

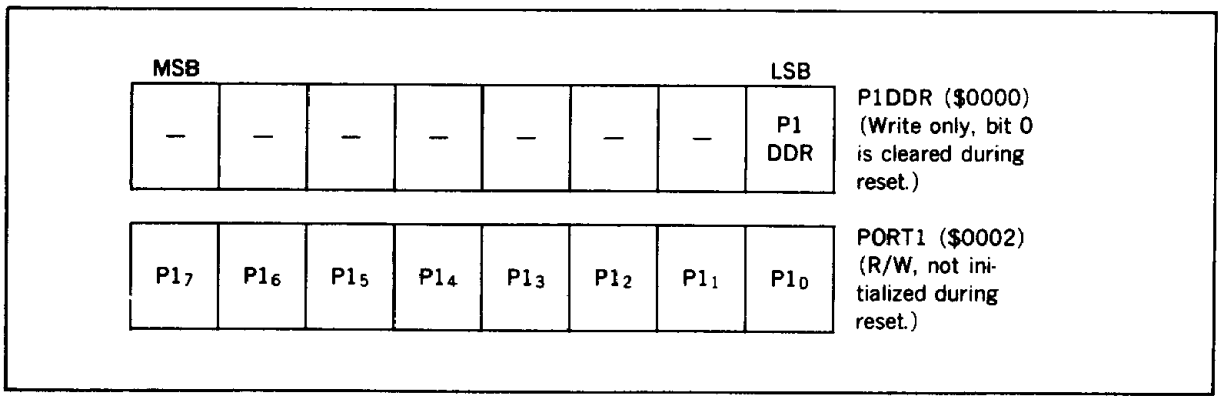

Figure 10. Port 1 Register and Data Direction Register

Port 2 : Port 2 is an 8-bit I/O port (figure 11). Each bit of the DDR ($0001) defines the data direction of the corresponding bit of port 2 (figure 12). Port 2 can drive one TTL load and 30 pF capacitance. It can produce 1 mA when $V_{out} = 1.5$ V to directly drive the base of a Darlington transistor.

Port 2 pins are also used as I/O pins by timers 1, 2, and the SCI (table 8). The pin functions are controlled by registers in timers 1, 2, and the SCI.

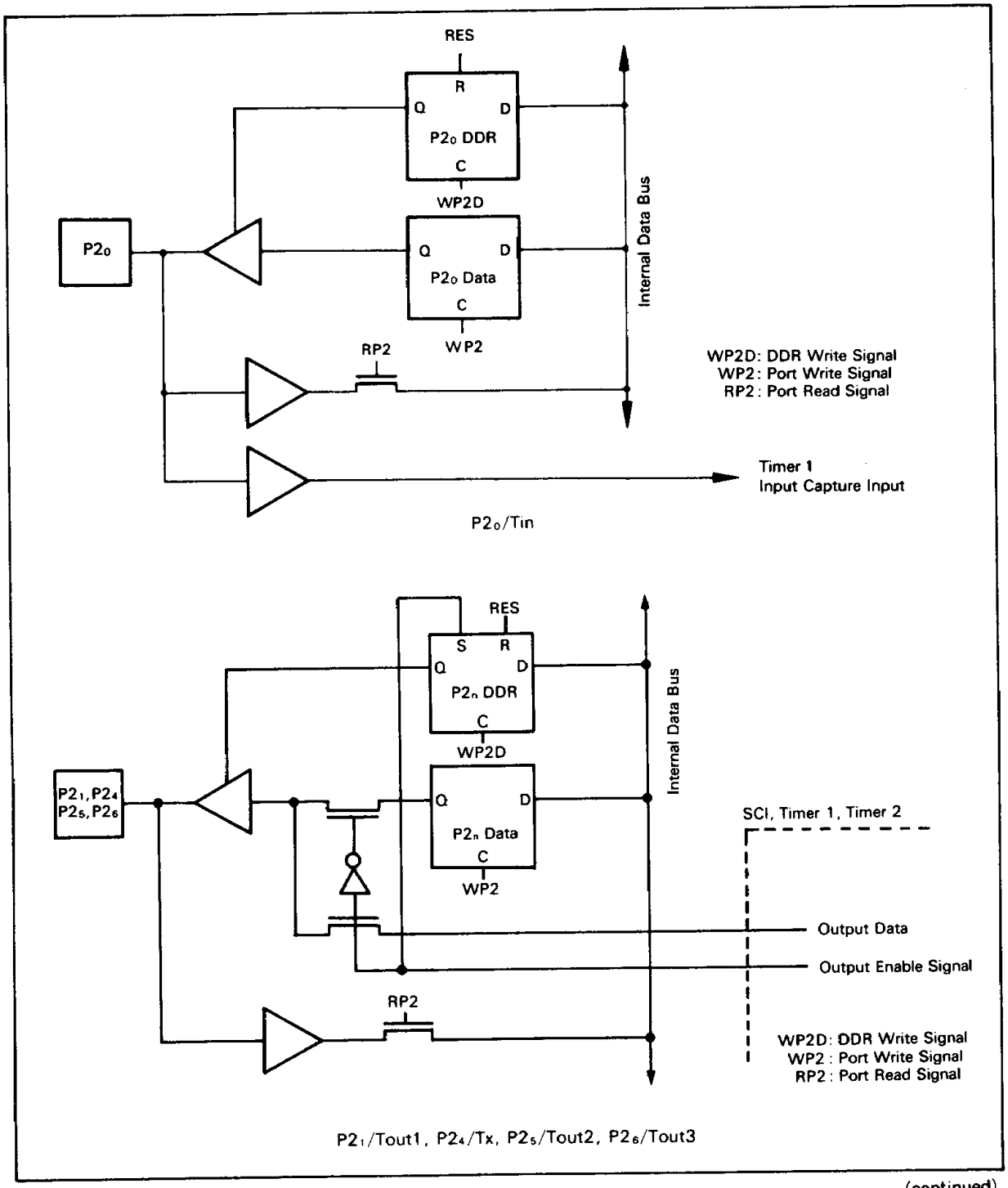

(continued)

Figure 11. Port 2 Block Diagram

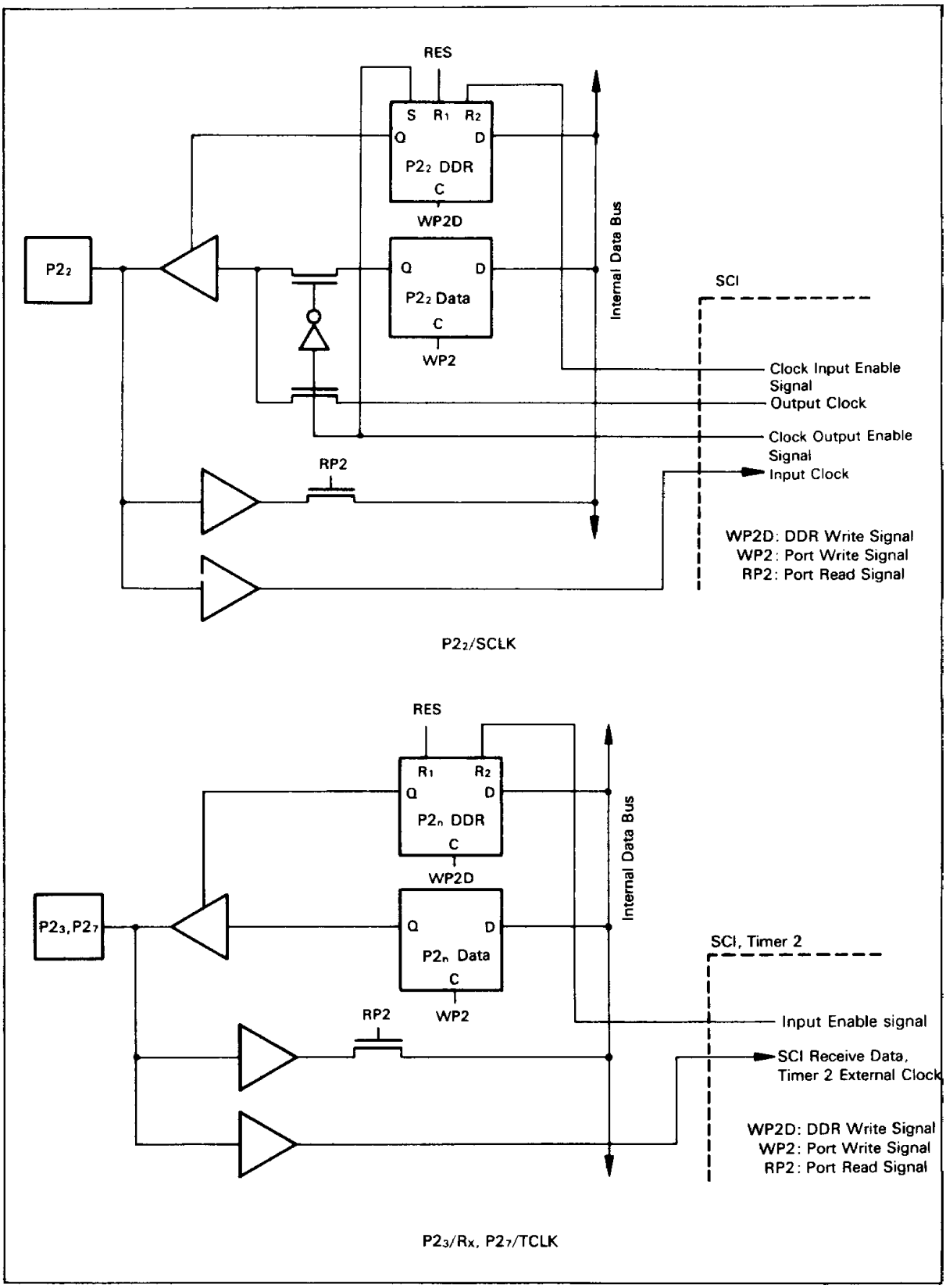
RES
S R1 R2
Q D
P22 DDR
C
WP2D
P22
Q D
P22 Data
C
WP2
Internal Data Bus
SCI
Clock Input Enable Signal
Output Clock
Clock Output Enable Signal
Input Clock
RP2
WP2D: DDR Write Signal
WP2: Port Write Signal
RP2: Port Read Signal
P22/SCLK
RES
R1 R2
Q D
P2n DDR
C
WP2D
P23,P27
Q D
P2n Data
C
WP2
RP2
Internal Data Bus
SCI, Timer 2
Input Enable signal
SCI Receive Data, Timer 2 External Clock
WP2D: DDR Write Signal
WP2: Port Write Signal
RP2: Port Read Signal
P23/Rx, P27/TCLK

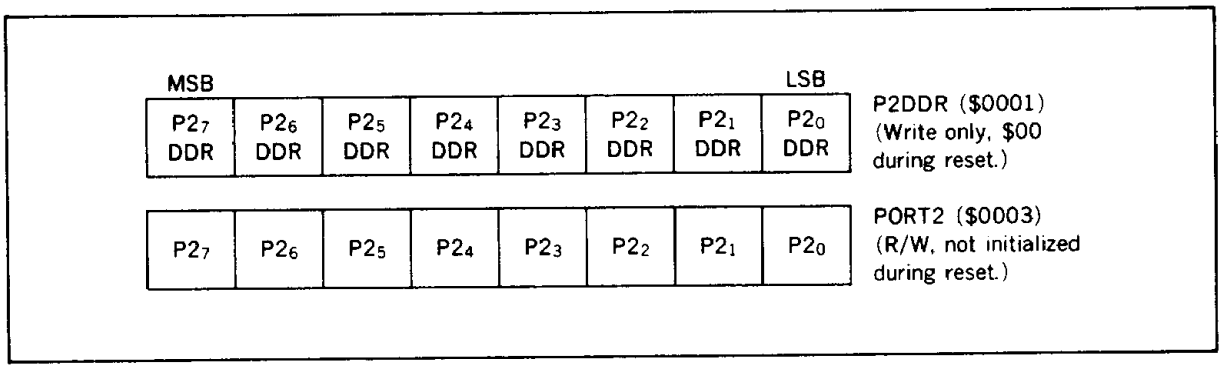

Figure 12. Port 2 Register and Data Direction Register

Table 8. Port 2 Pin Functions

Port 2 Pin	Alternate Function	Description
$P2_0$	Tin	Timer 1 input
$P2_1$	Tout1	Timer 1 output 1
$P2_2$	SCLK	SCI clock
$P2_3$	R_X	SCI receive input
$P2_4$	T_X	SCI transmit output
$P2_5$	Tout2	Timer 1 output 2
$P2_6$	Tout3	Timer 2 output 3
$P2_7$	TCLK	Timer 2 clock

Port 3 : Port 3 is an 8-bit I/O port (figure 13). The LSB of the DDR ($0004) selects the data direction of the whole port (figure 14). In the expanded modes (1 and 2) port 3 is the lower data bus (D_7-D_0). Port 3 can drive one TTL load and 90 pF capacitance.

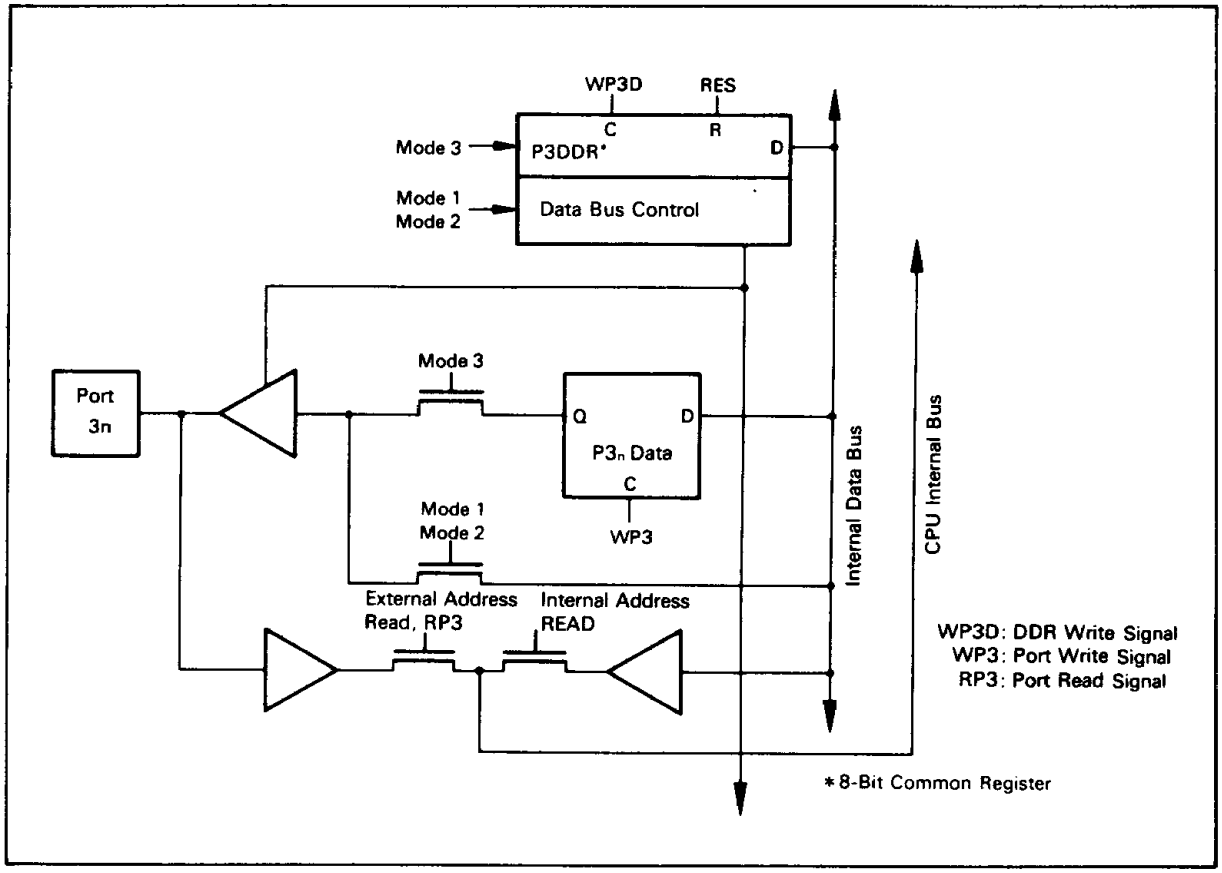

Figure 13. Port 3 Block Diagram

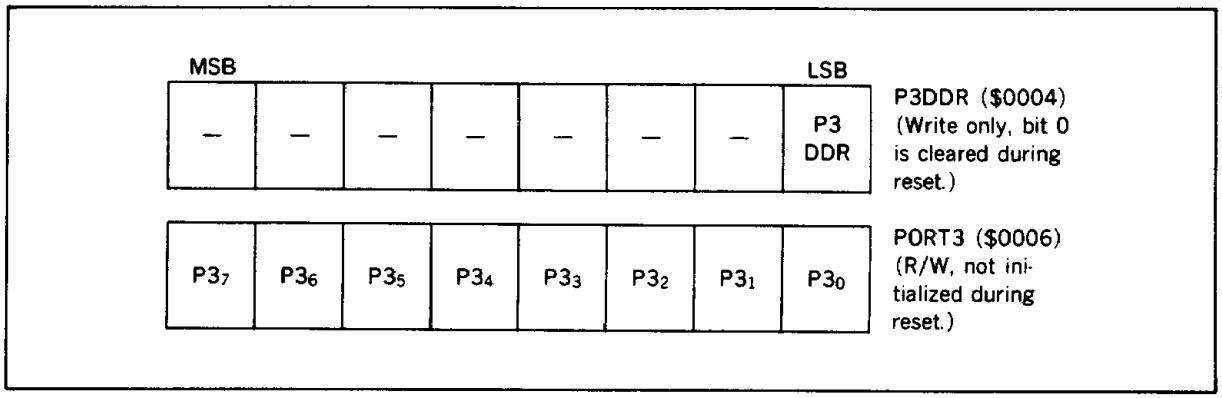

Figure 14. Port 3 Register and Data Direction Register

Port 4 : Port 4 is an 8-bit I/O port (figure 15). Each bit of the DDR ($0005) defines the data direction of the corresponding bit of port 4 (figure 16). In the expanded modes (1 and 2), port 4 is the upper address bus (A_{15}-A_8). In mode 1 (expanded mode with no external ROM), the DDR is set automatically and port 4 outputs addresses. In mode 2 (expanded mode with external ROM), the DDR must be set to 1 for port 4 to function as the address bus. Pins that are not needed for the address bus can be used as input pins. Port 4 can drive one TTL load and 90 pF capacitance.

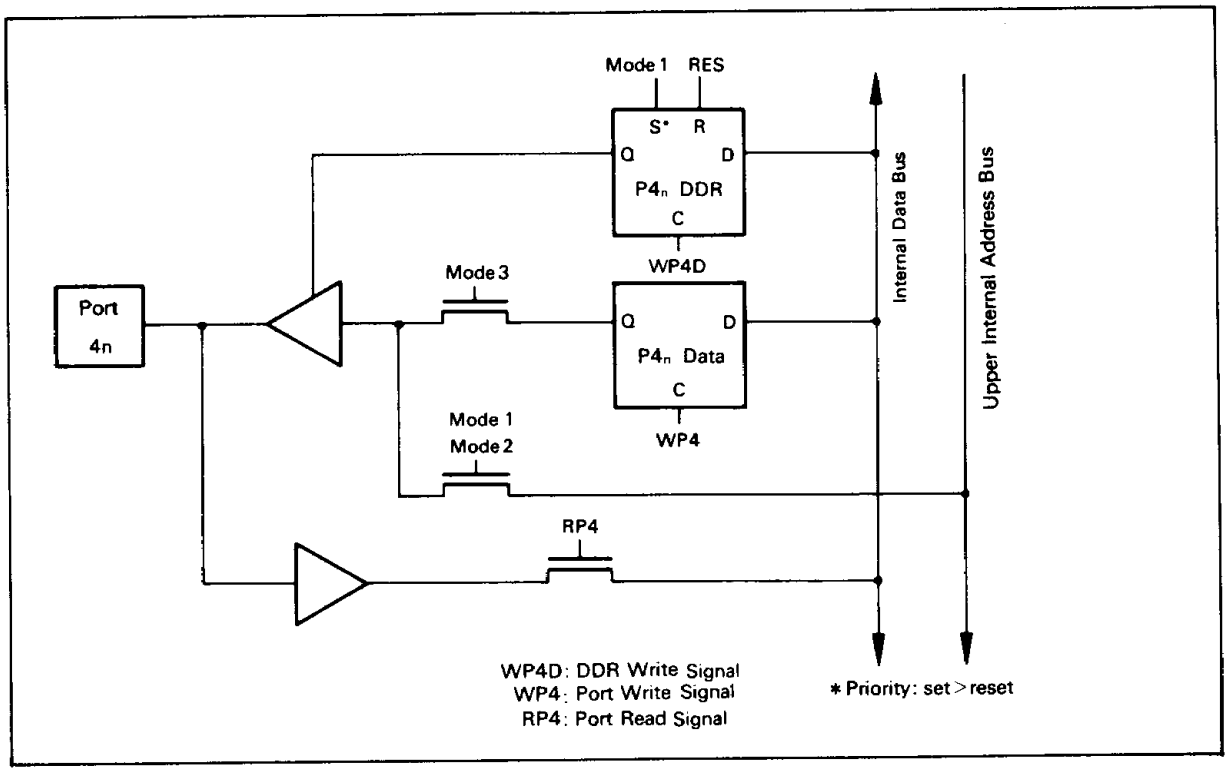

Figure 15. Port 4 Block Diagram

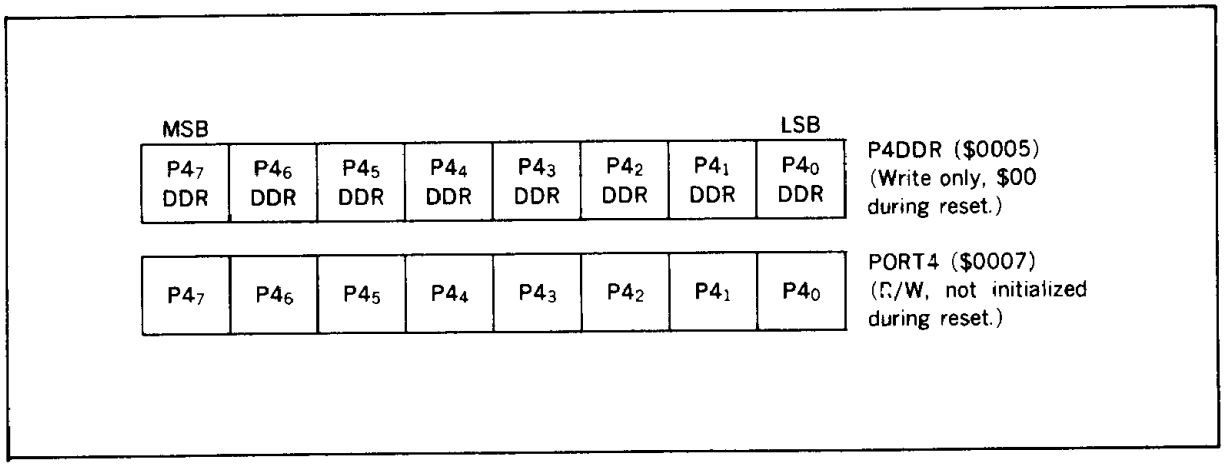

Figure 16. Port 4 Register and Data Direction Register

Port 5 : Port 5 is an 8-bit I/O port (figure 17). Each bit of the DDR ($0020) befines the data direction of the corresponding bit of port 5 (figure 18). Port 5 can drive one TTL load and 30 pF capacitance.

$P5_5$-$P5_0$ are also used as control pins (table 9). The function of these pins is determined by the RAM/port 5 control register (RP5CR), except for $P5_4/\overline{IS}$ and $P5_5/\overline{OS}$, which are controlled by the port 6 control/status register (P6CSR).

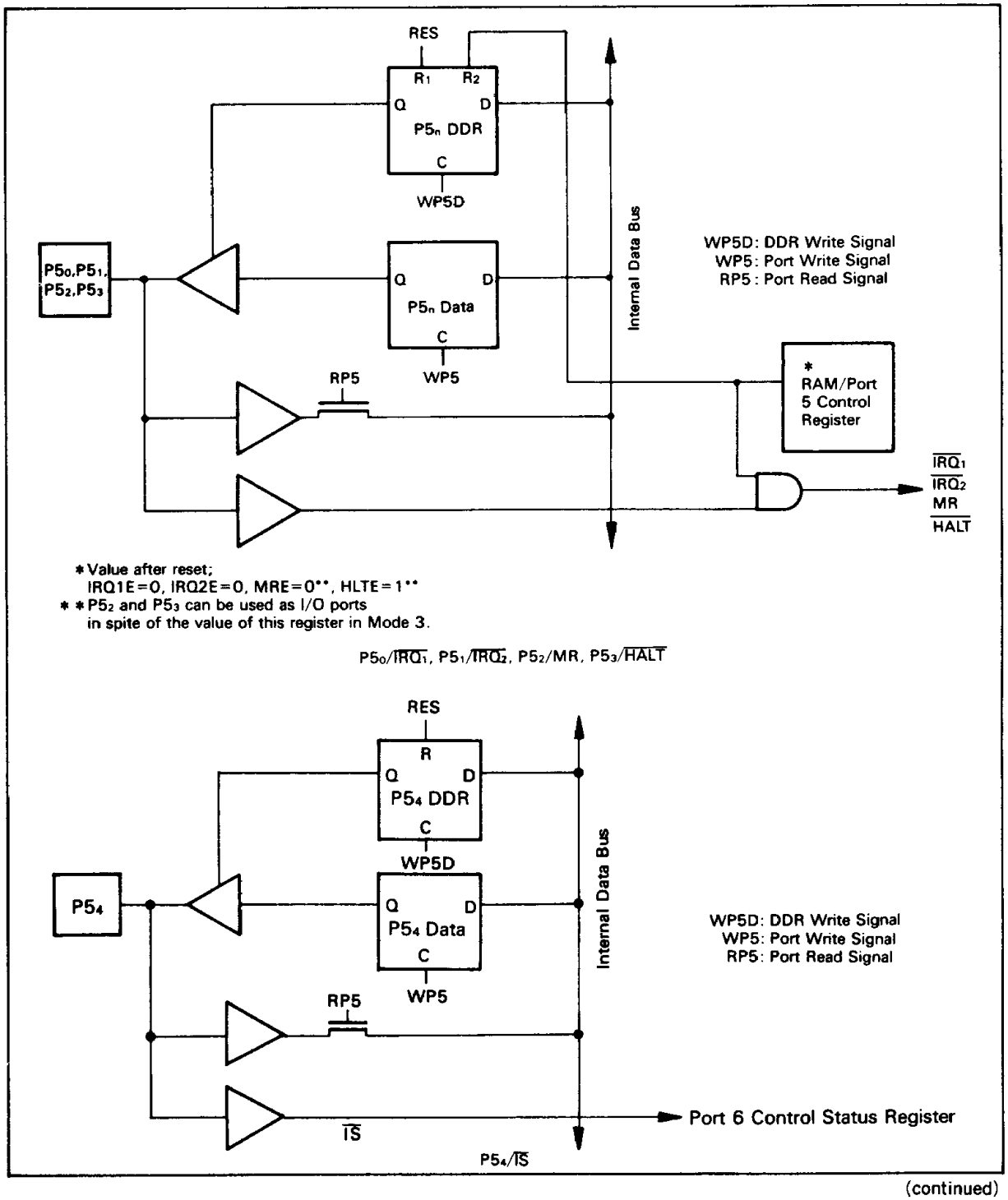

(continued)

Figure 17. Port 5 Block Diagram

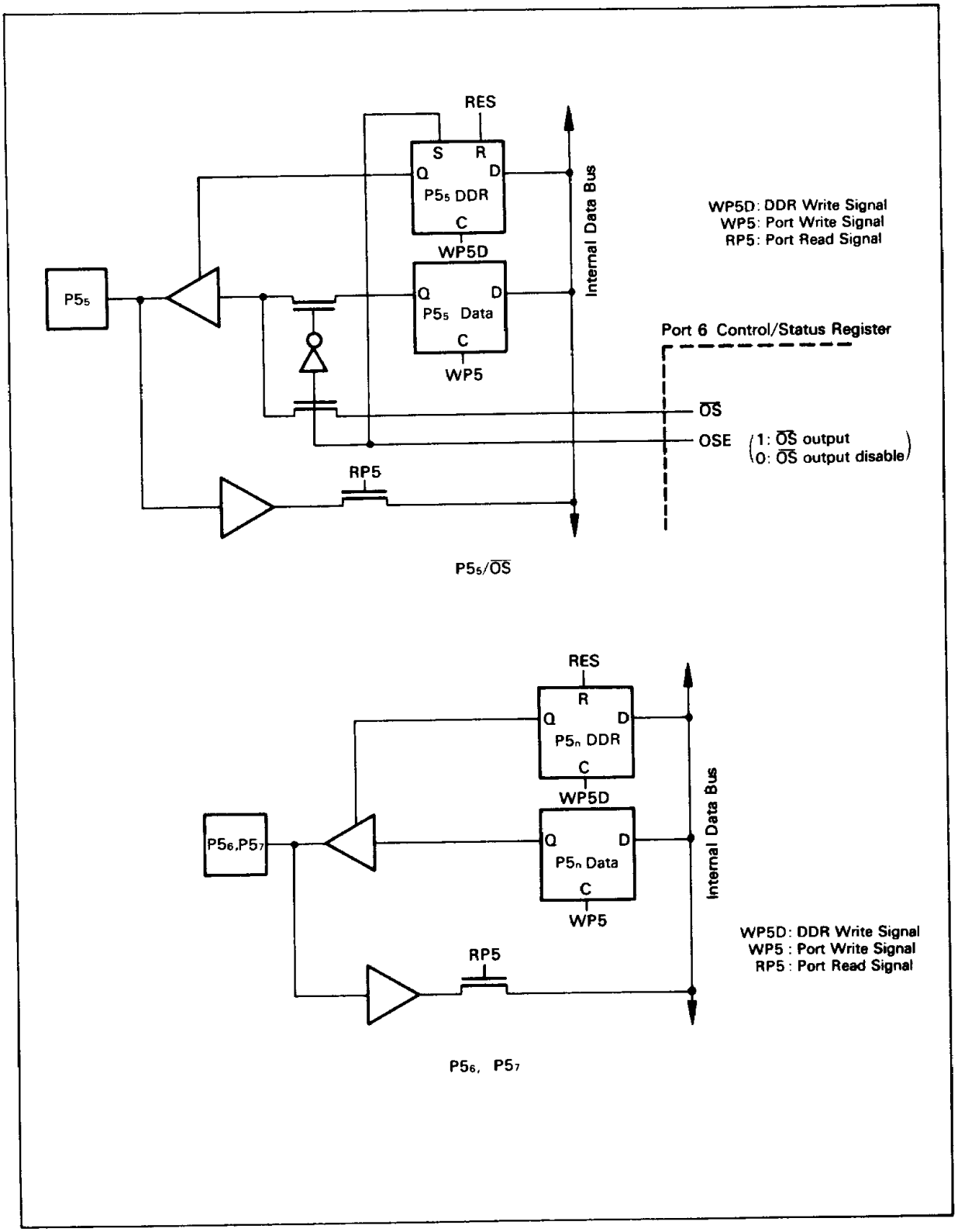

Figure 17. Port 5 Block Diagram (Cont)

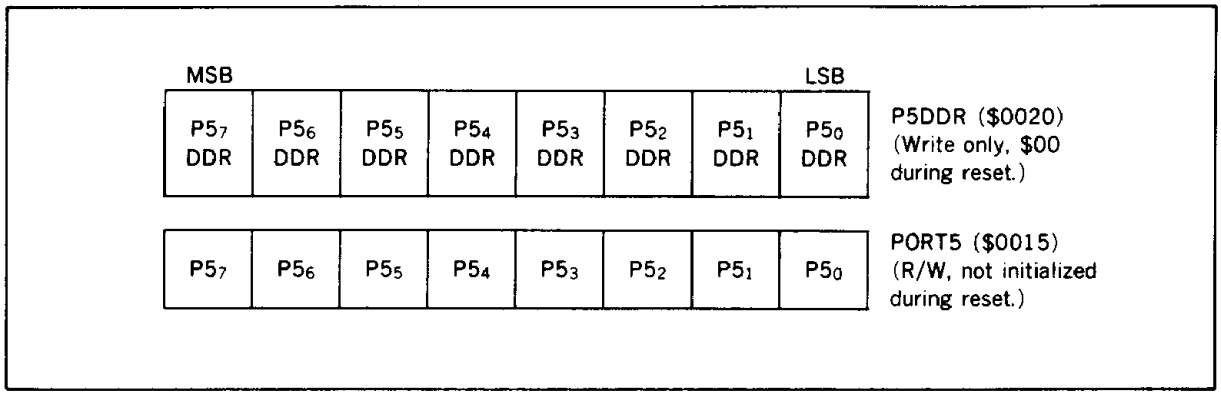

Figure 18. Port 5 Register and Data Direction Register

Table 9. Port 5 Pin Functions

Port 5 Pin	Alternate Function	Description
$P5_0$	$\overline{IRQ_1}$	Interrupt input 1
$P5_1$	$\overline{IRQ_2}$	Interrupt input 2
$P5_2$	MR	Memory ready input
$P5_3$	$\overline{HALT}$	Halt input
$P5_4$	$\overline{IS}$	Input strobe
$P5_5$	$\overline{OS}$	Output strobe

RAM/Port 5 Control Register : The RAM/port 5 control register (RP5CR: $0014) controls onchip RAM and port 5 (figure 19).

- IRQ_1E, IRQ_2E: Setting IRQ_1E and IRQ_2E to 1 selects $P5_0$ and $P5_1$ as the $\overline{IRQ_1}$ and $\overline{IRQ_2}$ interrupt inputs. These bits are cleared at reset.

- MRE, AMRE: When MRE or AMRE is set to 1, $P5_2$ becomes the MR input. When both are 0, memory ready is inhibited (table 10). In mode 3, memory ready is always inhibited, regardless of these bits. MRE is cleared at reset, AMRE is set to 1.

- HLTE: When HLTE is set to 1, $P5_3$ becomes the $\overline{HALT}$ input. When 0, HALT is inhibited. In mode 3, $\overline{HALT}$ is always inhibited, regardless of HLTE. This bit is set to 1 at reset.

- STBY FLAG: Clearing STBY FLAG by software puts the MCU into standby mode. This flag is set to 1 at reset, so reset cancels the standby mobe. If the STBY pin is low, this flag cannot be cleared.

- RAME: When RAME is set to 1, on-chip RAM is enabled. When 0, it is disabled. RAME is set to 1 at reset. This bit should be set to 0 before going into standby state to protect on-chip RAM data.

- STBY PWR: When V_{CC} is not provided in standby mode, STBY PWR is cleared. If STBY PWR is set before the MCU goes to standby, and remains set after standby, V_{CC} was continuously supplied, and the contents of on-chip RAM are valid.

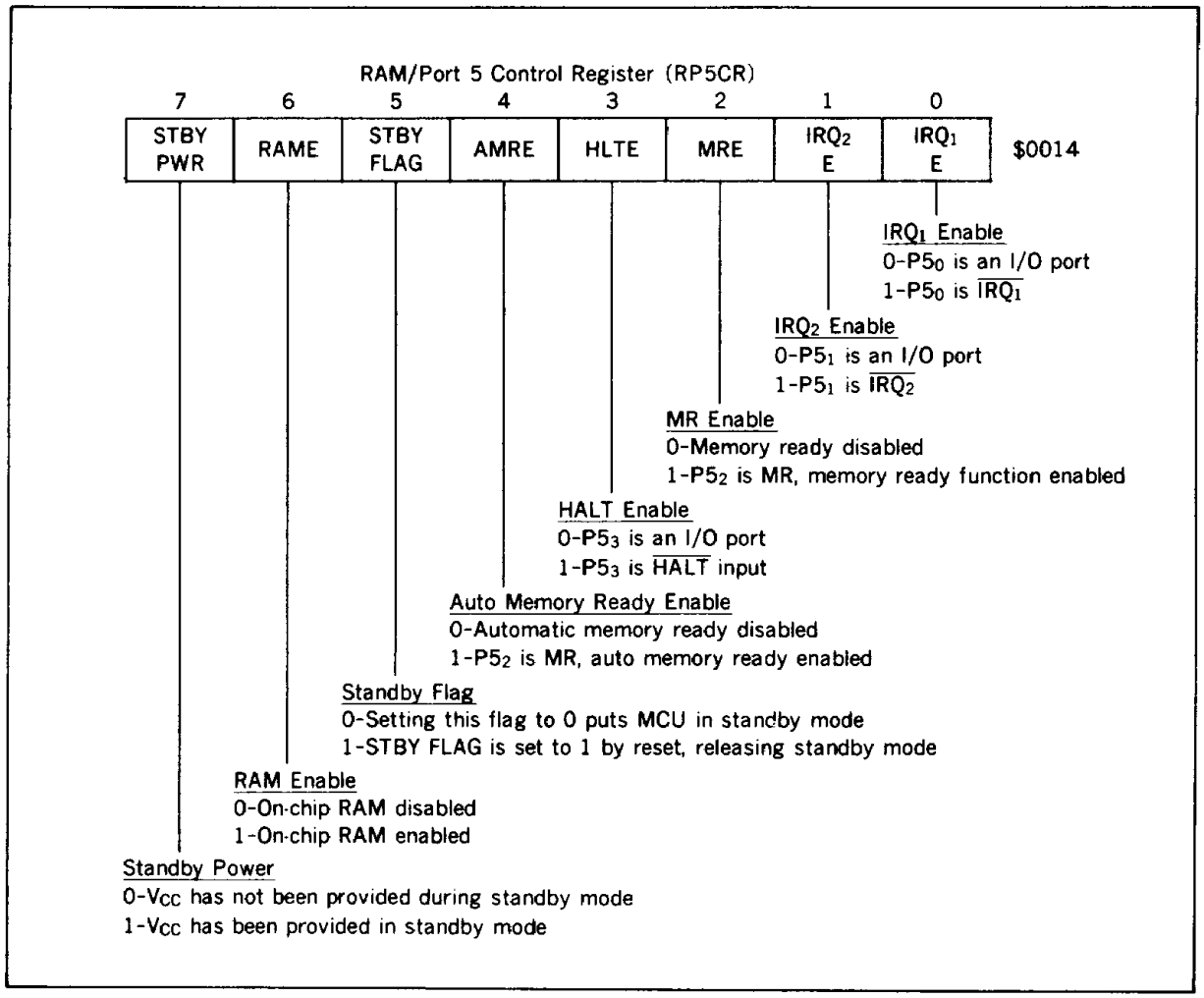

Figure 19. RAM/Port 5 Control Register

Table 10. Memory Ready Function

MRE	AMRE	Function
0	0	Memory ready inhibited.
0	1	Auto memory ready. When the CPU accesses the external address regardless of MR, E clock automatically stays high one-cycle longer. This state is retained during reset.
1	0	Memory ready. MR pin controls E clock high time.
1	1	When the CPU accesses the external address space with the $P5_2$ (MR) pin low the auto memory ready operates. This function useful if there is both high-speed memory and slow memory outside. Input $\overline{CS}$ signal of slow memory to MR pin.

Port 6 : Port 6 is an 8-bit I/O port (figure 20). Each bit of the DDR ($0016) defines the data direction of the corresponding bit of port 6 (figure 21). Port 5 can drive one TTL load and 30 pF capacitance. In addition, it can drive the base of Darlington transistors directly.

Port 6 can function as a parallel handshake interface under the control of the port 6 control/status register (P6CSR : $0021). Port 6 has a data latch for input data (IS LATCH).

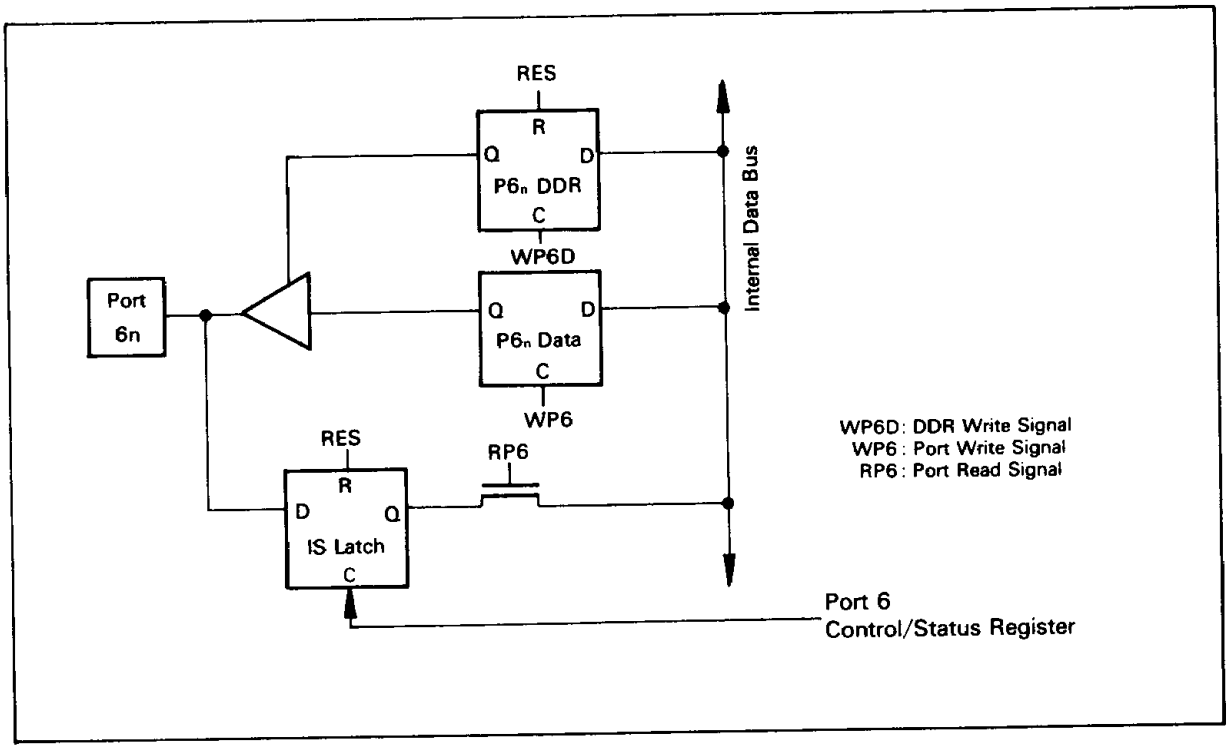

Figure 20. Port 6 Block Diagram

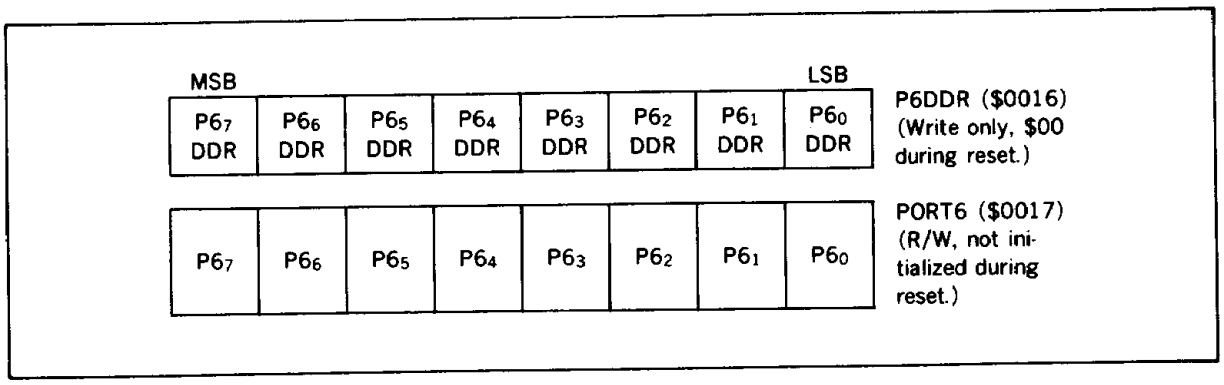

Figure 21. Port 6 Register and Data Direction Register

Port 6 Control/Status Register : The port 6 control/status register (P6CSR : $0021) controls and holds the status of the port 6 handshake interface (figure 22). The handshake interface functions as follows.

1. Latches the data input at port 6 on the falling edge of $\overline{IS}$ ($P5_4$).
2. Outputs $\overline{OS}$ ($P5_5$) when reading or writing to port 6.
3. When IS FLAG is set by the falling edge of IS, an interrupt occurs (figure 23).

- LATCH ENABLE : The LATCH ENABLE bit controls the port 6 input latch (IS LATCH). When it is set, the input data at port 6 will be latched in at the falling edge of $\overline{IS}$ ($P5_4$). Reading port 6 clears the latch. If LATCH ENABLE is 0, the input latch is disabled, and $P5_4$ acts as an ordinary I/O port. LATCH ENABLE is cleared at reset.
- OSS : When OSS is set, writing to port 6 initiates an output strobe signal ($\overline{OS}/P5_5$). When OSS is cleared, reading port 6 initiates an $\overline{OS}$. OSS is cleared at reset.
- OSE : When OSE is set, $P5_5$ is the output strobe, $\overline{OS}$. When cleared, it is a normal I/O port.
- IS IRQ_1 ENABLE : When IS IRQ_1 ENABLE is set, IS FLAG set causes an $\overline{IRQ_1}$ interrupt. When cleared, IS FLAG does not cause an interrupt. This bit is cleared at reset.
- IS FLAG : The IS FLAG is set by the falling edge of $\overline{IS}$. It is a read-only flag. It is cleared by reading or writing to port 6 after reading the P6CSR. IS FLAG is cleared during reset.

Table 11 shows the conditions that set and reset the port 6 control/status register flags.

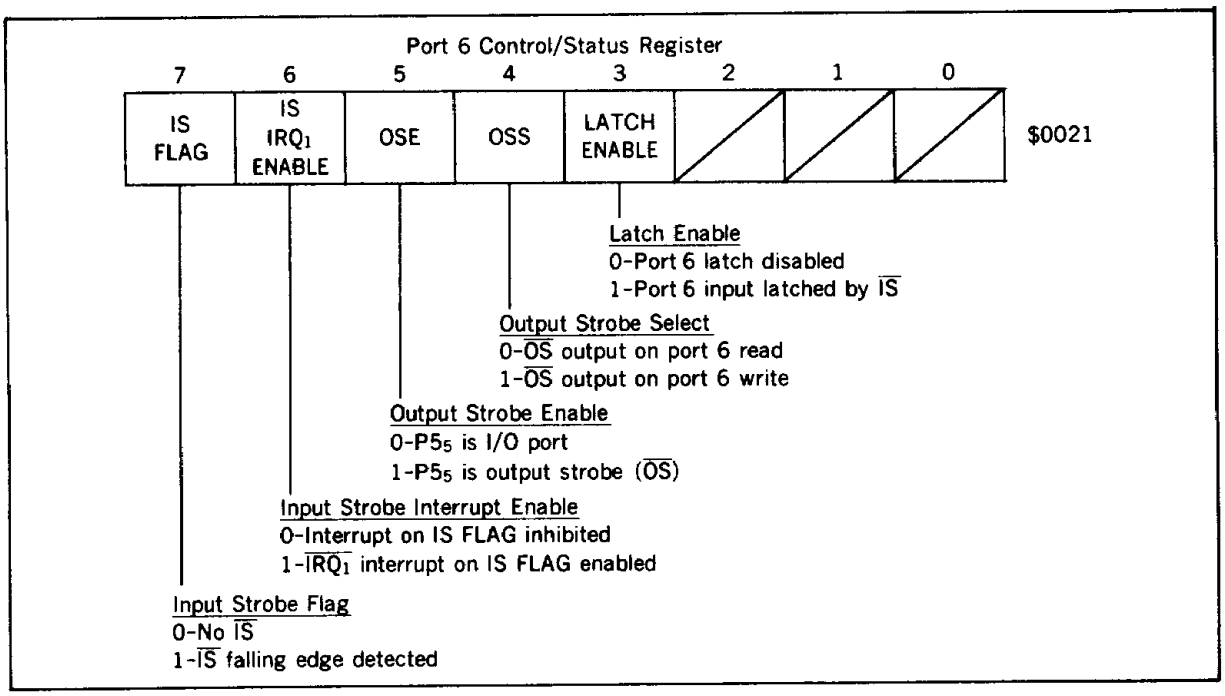

Figure 22. Port 6 Control/Status Register

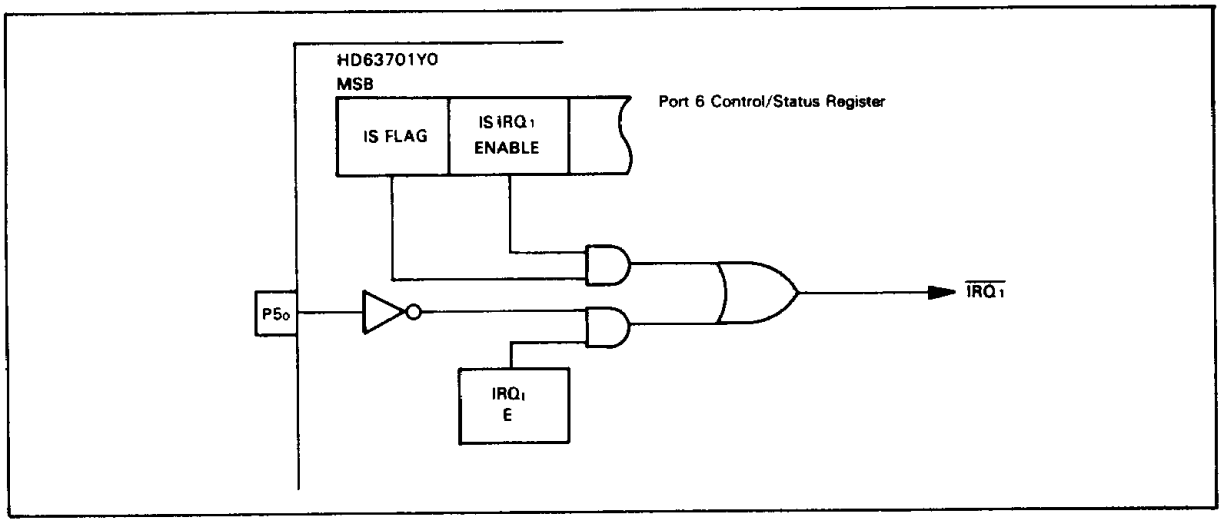

Figure 23. Input Strobe Interrupt Block Diagram

Table 11. Port 6 Control Status Register Status Flags Set and Reset Conditions

Flag	Set Condition	Clear Condition
IS FLAG	Falling edge input to $P5_4$ ($\overline{IS}$)	• Read the P6CSR then read or write the port 6, when IS FLAG=1 • $\overline{RES}$=0
ICF	FRC→ICR by rising or falling edge input to $P2_0$. (Selected by IEDG)	• Read the TCSR1 or TCSR2 then ICRH, when ICF=1 • $\overline{RES}$=0

Port 7 : Port 7 is a 5-bit output only port (figures 24, 25). In the expanded modes (1 and 2), port 7 outputs control signals from the CPU. Port 7 goes to high-impedance state during reset. Port 7 can drive one TTL load and 30 pF capacitance.

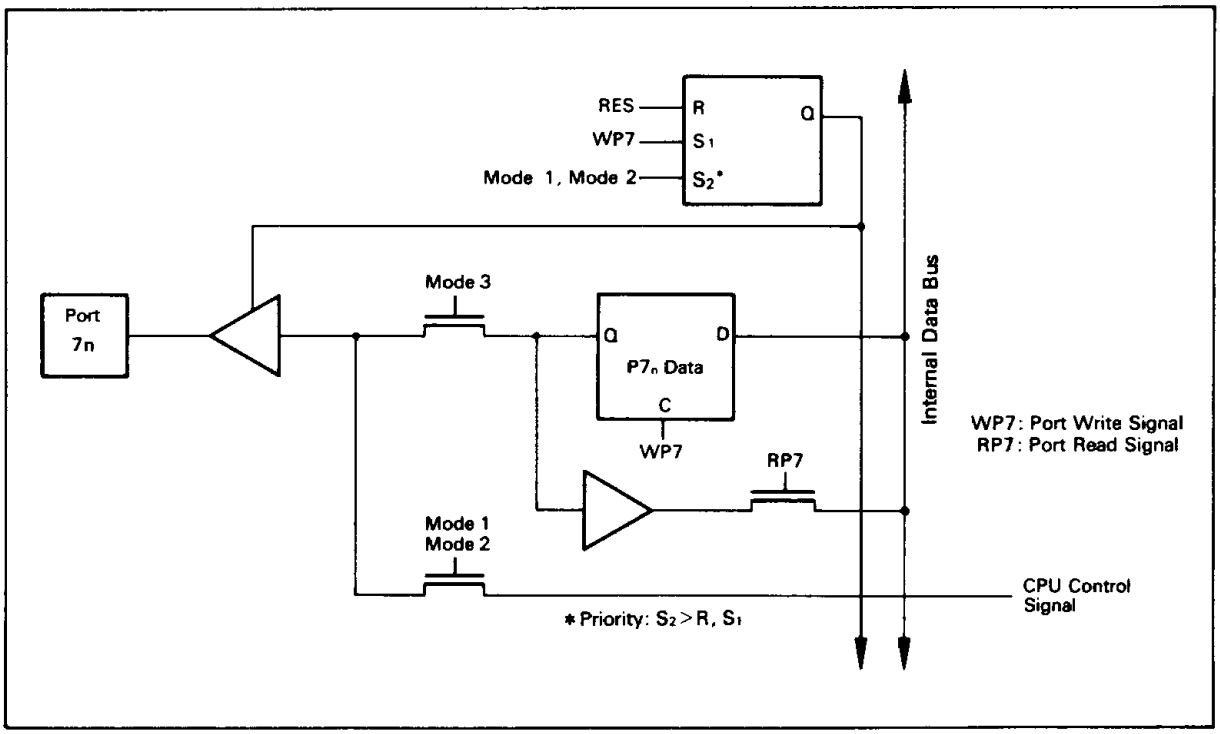

Figure 24. Port 7 Block Diagram

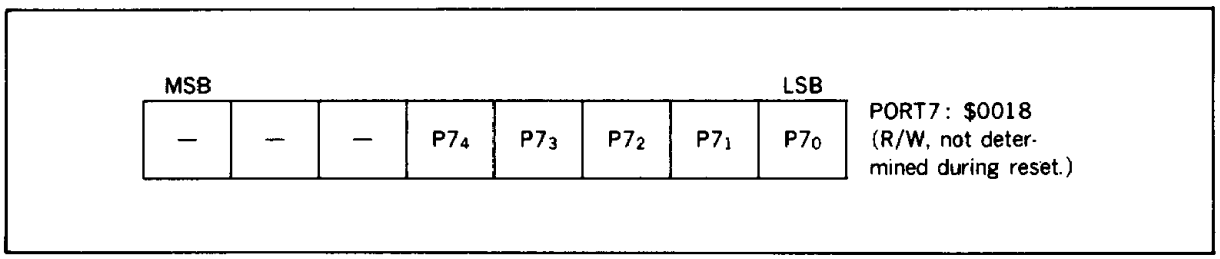

Figure 25. Port 7 Register

16-Bit Programmable Timer (Timer 1)

Timer 1 can simultaneously measure an input waveform and generate two independent output waveforms. The pulse widths of both input and outputs can vary from microseconds to seconds.

Timer 1 (figure 26) is configured as follows:

Registers:
- Control/status registers 1 and 2
- Free-running counter
- Output compare registers 1 and 2
- Input capture register

Timer I/O pins:
- Tin ($P2_0$), input
- Tout1 ($P2_1$), output
- Tout2 ($P2_5$), output

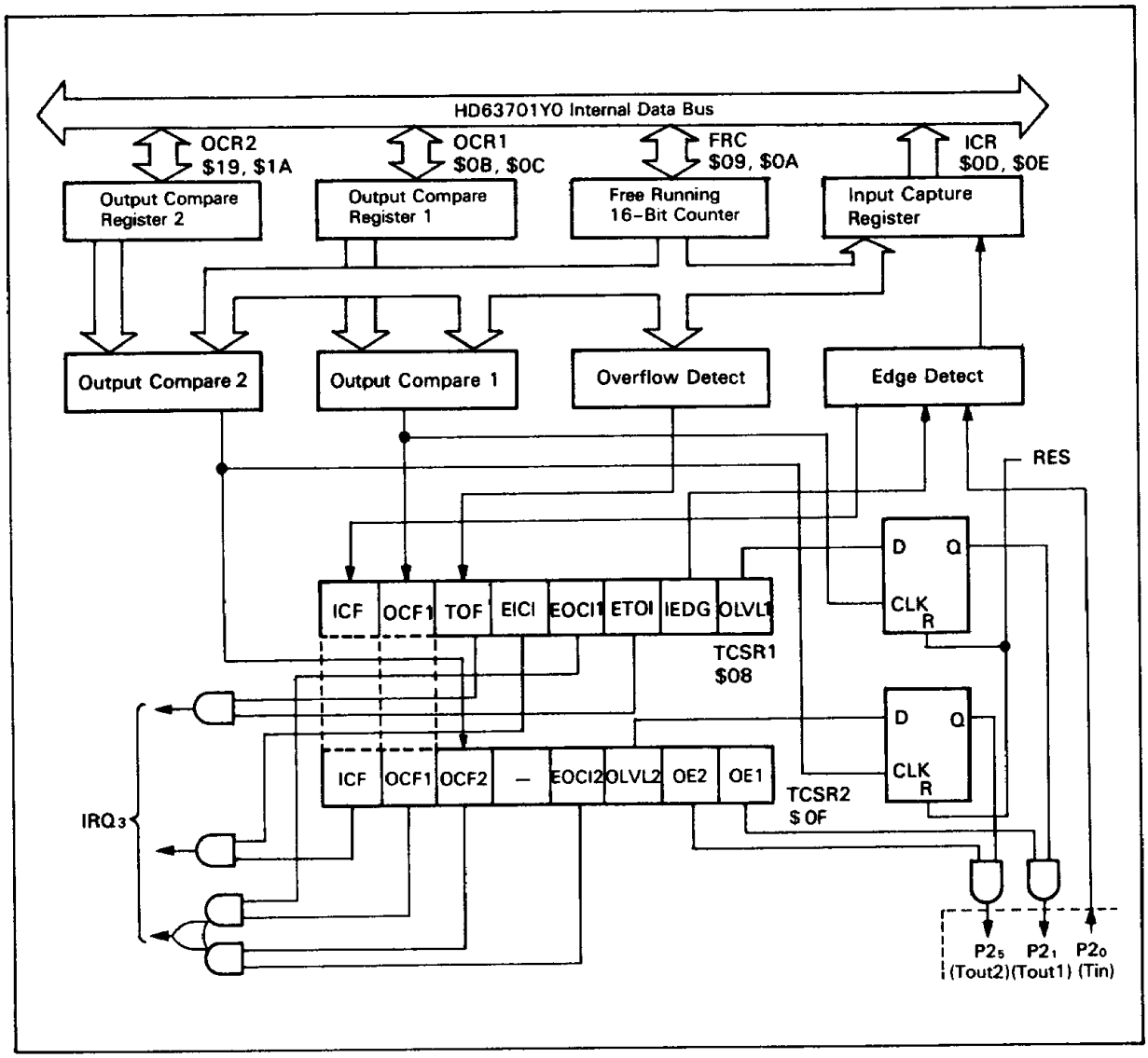

Figure 26. Timer 1 Block Diagram

Free-Running Counter : The free-running counter (FRC : $0009, $000A) is a 16-bit free-running counter incremented by the system clock. Its value can be read without affecting its operation. The FRC is cleared at reset.

Output Compare Registers : The output compare registers (OCR1 : $000B, $000C, OCR2 : $0019, $001A) are 16-bit read/write registers that control the output waveforms. The data in the FRC is always being compared to the OCRs. When the data matches, an output compare flag (OCF) is set in the corresponding timer control/status register (TCSR).

Input Capture Register : The input capture register (ICR : $000D, $000E) is a 16-bit read-only register which stores the FRC's value when a $P2_0$ transition causes an input capture pulse. IEDG of TCSR1 determines which transition causes the input capture. ICR is cleared at reset.

Timer Control/Status Register 1 : The timer control/status register 1 (TCSR1 : $0008 ; figure 27) is an eight bit register. All bits can be read and the lower five can be written. The upper three are read-only status bits. TCSR1 is cleared at reset.

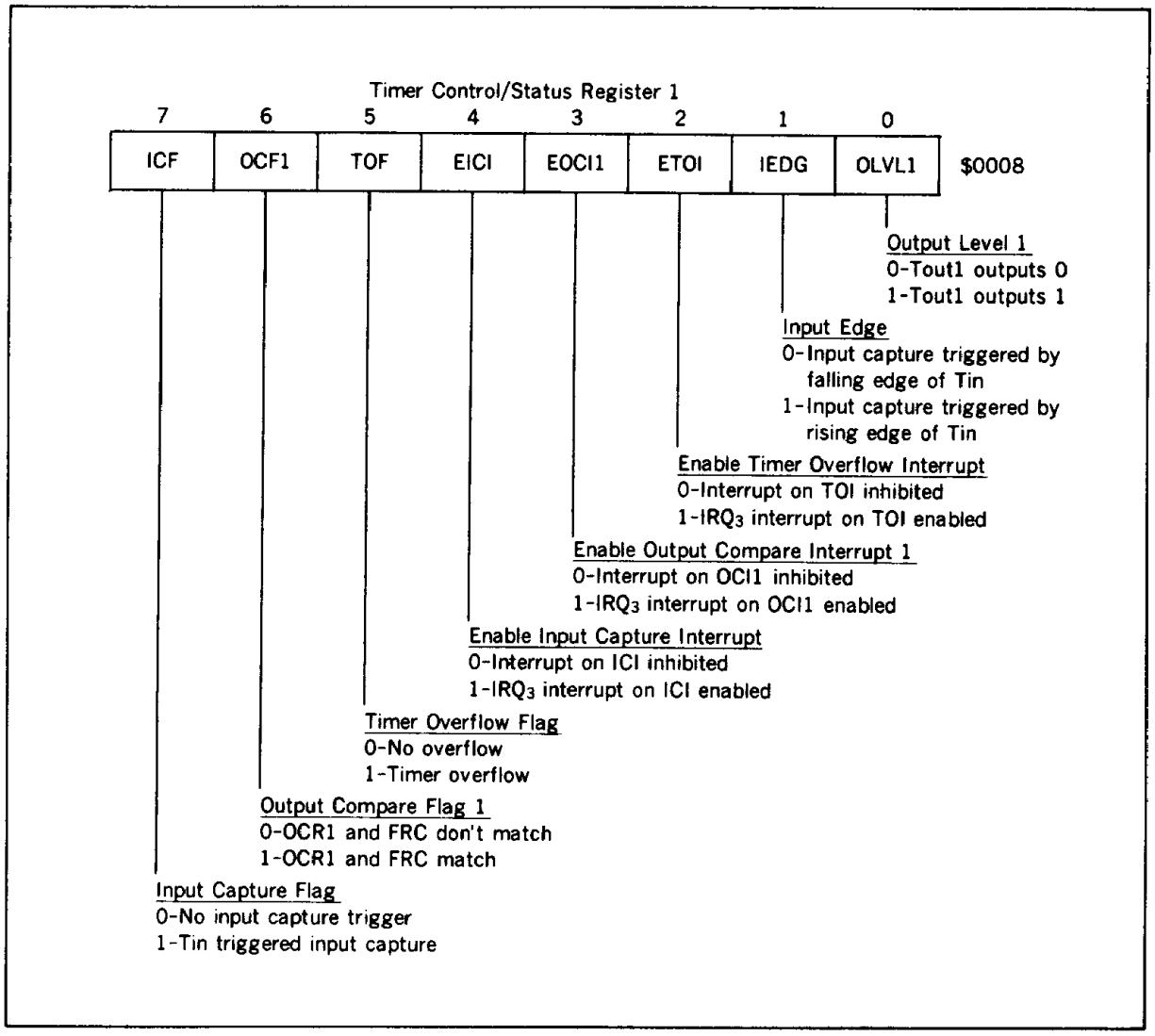

Figure 27. Timer Control/Status Register 1

- OLVL1 : If OE1 of TCSR2 is set, the value of OLVL1 will appear at Tout1 ($P2_1$) when a match occurs between the FRC and OCR1.

- IEDG : IEDG determines which edge of Tin/$P2_0$ will trigger data transfer from the counter to the ICR. IEDG=0 selects the falling edge (high to low transition), IEDG=1 selects the rising edge (low to high transition).

- ETOI : When ETOI is set to 1, timer overflow will cause internal interrupt IRQ_3. When it is cleared, the interrupt is inhibited.

- EOCI1 : When EOCI1 is set to 1, a counter match with OCI1 will cause an IRQ_3 interrupt. When it is cleared, the interrupt is inhibited.

- EICI : When EICI is set to 1, an input capture signal (Tin) will cause an interrupt IRQ_3. When it is cleared, the interrupt is inhibited.

- TOF : The read-only flag TOF is set to 1 when the counter increments from $FFFF to $0000. It is cleared when the CPU reads the FRC's upper byte ($0009) after it reads the TCSR1 with TOF=1.

- OCF1 : The read-only flag OCF1 is set to 1 when a match occurs between OCR1 and the FRC. It is cleared when the CPU writes to the OCR1 ($000B or $000C) after it reads the TCSR1 or TCSR2 with OCF1 or OCF2=1. OCF1 is also available at TCSR2, bit 6.

- ICF : The read-only flag ICF1 is set to 1 when Tin/$P2_0$ makes the transition defined by IEDG and the FRC is transferred to the ICR. It is cleared when the CPU reads the upper byte or the ICR after it reads the TCSR1 or TCSR2 with ICF =1. ICF is also available at TCSR2, bit 7.

Timer Control/Status Register 2 : The timer control/status register 2 (TCSR2: $000F; figure 28) is a seven bit register. All bits can be read and the lower four can be written. The upper three are read-only status bits. All bits are cleared at reset, except bit 4, which isn't used.

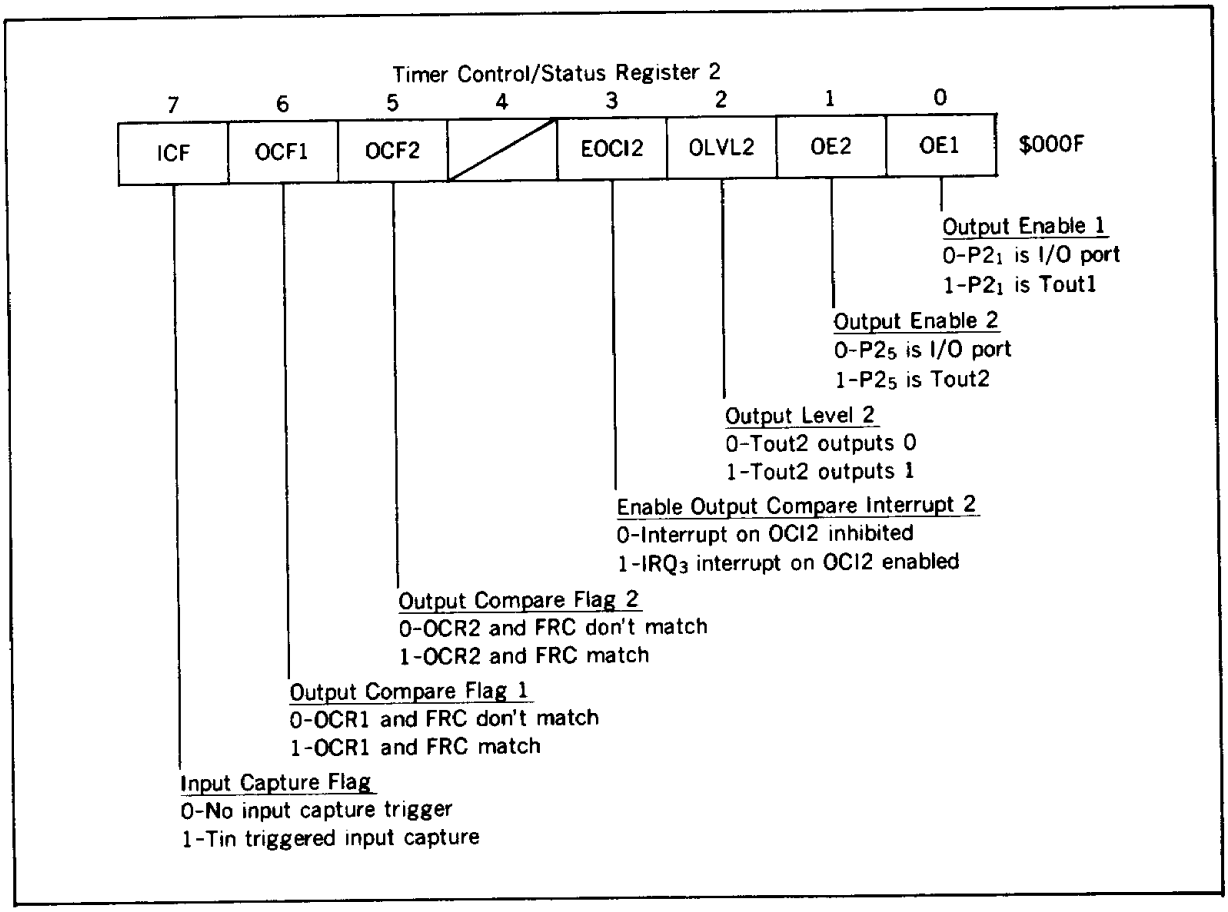

Figure 28. Timer Control/Status Register 2

- OE1 : When OE1 is set, OLVL1 will be output to Tout1/$P2_1$ when there is a match between the FRC and OCR1. When OE1 is 0, $P2_1$ will be an I/O port.

- OE2 : When OE2 is set, OLVL2 will be output to Tout2/$P2_5$ when there is a match between the FRC and OCR2. When OE1 is 0, $P2_5$ will be an I/O port.

- OLVL2 : If OE2 of the TCSR2 is set, the value of OLVL2 will appear at Tout2 ($P2_5$) when a match occurs between the FRC and OCR2.

- EOCI2 : When EOCI2 is set, a counter match with OCI2 will cause an interrupt IRQ_3. When it is cleared, the interrupt is inhibited.

- OCF2 : The read-only flag OCF2 is set when a match occurs between OCR2 and the FRC. It is cleared when the CPU writes to OCR2 ($0019 or $001A) after it reads the TCSR2 with OCF2=1.

- OCF1, ICF : OCF1, ICF in the TCSR2 are the same as in the TCSR1. They can be addressed at either register.

Table 12 shows the conditions that set and reset the timer 1 flags.

8-Bit Reloadable Timer (Timer 2)

In addition to timer 1, the HD63701Y0 has an 8-bit reloadable timer, which can count external events. Timer 2 has one output, so together with timer 1, the HD63701Y0 can output three independent waveforms.

Timer 2 (figure 29) is configured as follows :

Registers :
- Control/status register (7 bits)
- Upcounter (8 bits)
- Time constant register (8 bits)

Timer I/O pins :
- Tout3 ($P2_6$), output
- TCLK ($P2_7$), input

Table 12. Timer 1 Status Flags Set and Reset Conditions

Flag	Set Condition	Clear Condition
OCF1	OCR1=FRC	• Read the TCSR1 or TCSR2 then write to the OCR1H or OCR1L, when OCF1=1 • $\overline{RES}$=0
OCF2	OCR2=FRC	• Read the TCSR2 then write to the OCR2H or OCR2L, when OCF2=1 • $\overline{RES}$=0
TOF	FRC=$FFFF+1 cycle	• Read the TCSR1 then FRCH, when TOF=1 • $\overline{RES}$=0

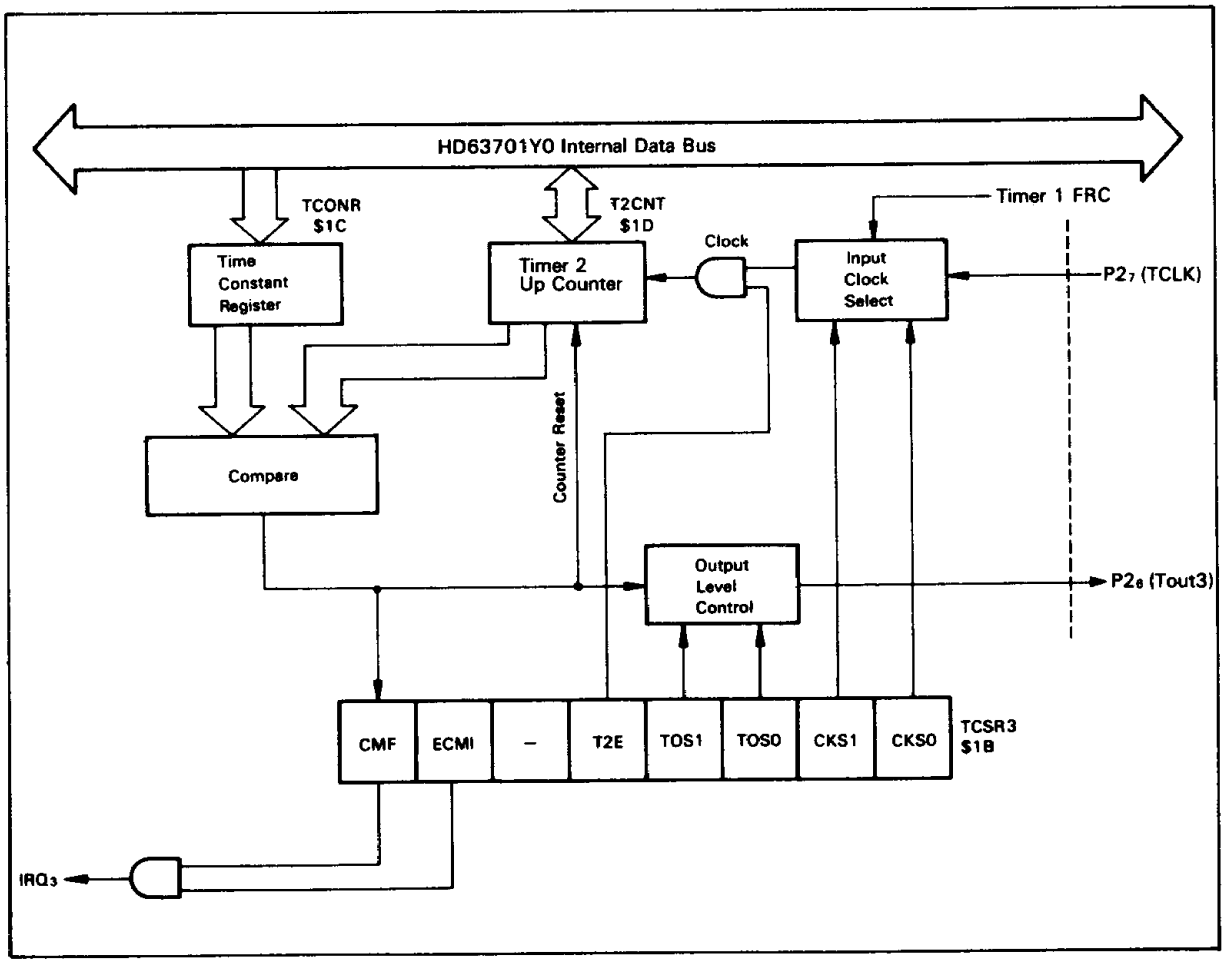

Figure 29. Timer 2 Block Diagram

Timer 2 Upcounter : The 8-bit upcounter (T2CNT : $001D) counts the clock specified by CKS0 and CKS1 of the TCSR3. The CPU can read the value of the T2CNT at any time without affecting its operation. In addition, any value can be written to it at any time, even when counting.

It is cleared when a match occurs between the T2CNT and the TCONR, or at reset.

Time Constant Register : The 8-bit, write-only time constant register (TCONR : $001C) is constantly compared to the T2CNT. A match sets the counter match flag (CMF) of the timer control status register 3 (TCSR3). It is set to $FF at reset.

Timer Control/Status Register 3 : Timer control/status register 3 (TCSR3 : $001B ; figure 30) is a 7-bit register. All bits can be read and all bits except for bit 7, CMF, can be written to. CMF can only be cleared, not set. The TCSR3 is cleared at reset.

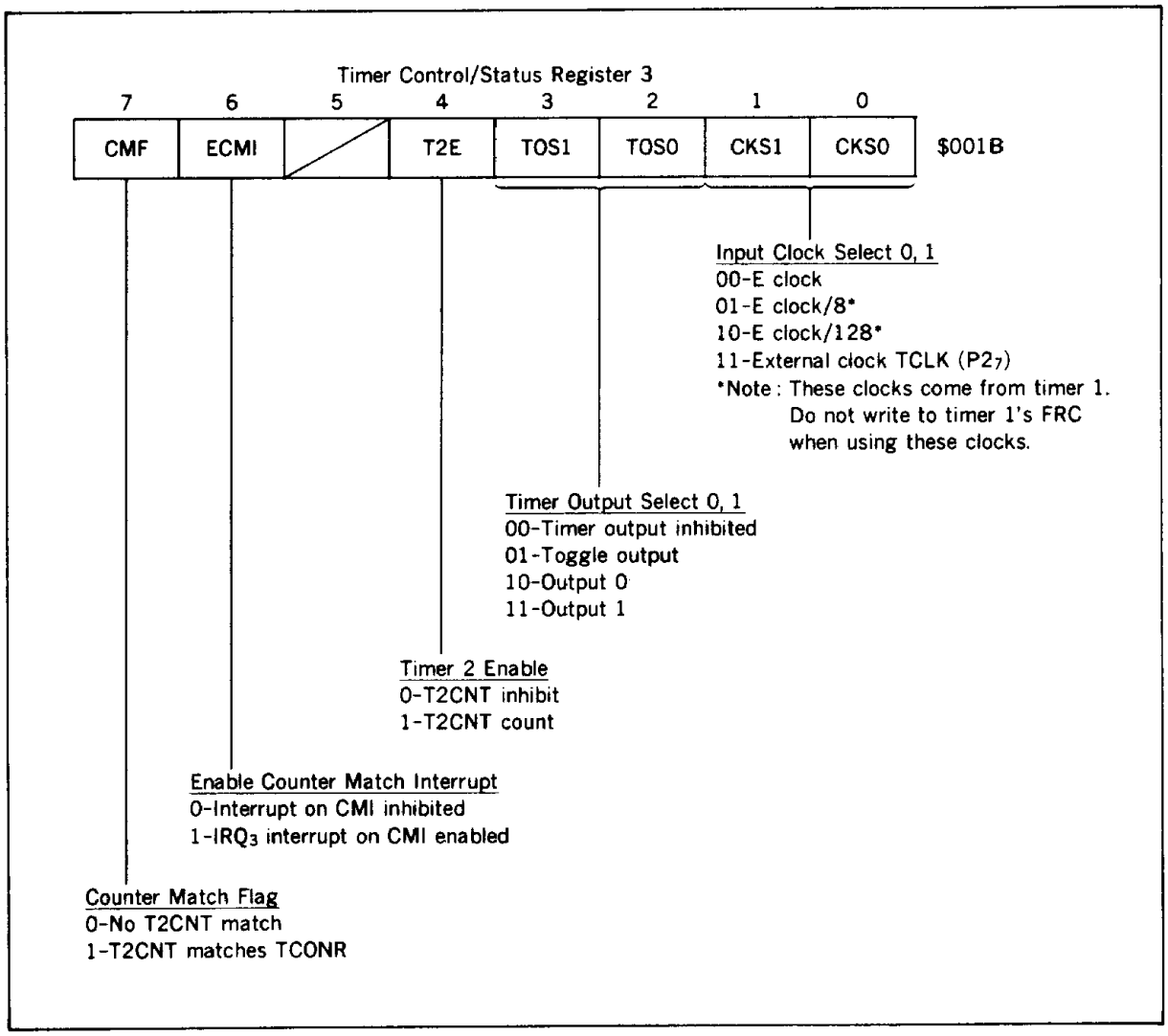

Figure 30. Timer Control/Status Register 3

- CKS0, CKS1 : CKS0 and CKS1 select timer 2's input clock as shown in figure 30. When an external clock is selected, $P2_7$ will be the clock input automatically.

- TOS0, TOS1 : TOS0 and TOS1 select the output that occurs on a counter match as shown is figure 30.

- T2E : When T2E is set, a clock is input to the T2CNT. When it is 0, the clock is inhibited.

- ECMI : When ECMI is set, a match between the T2CNT and the TCONR will cause an interrupt IRQ_3. When it is cleared, the interrupt is inhibited.

- CMF : CMF is set by a match between the T2CNT and the TCONR. It is cleared by writing a 0 to it when it is set to 1. You cannot write a 1 to CMF.

Table 13 shows the conditions that set and reset the timer 2 flags.

Serial Communication Interface

The serial communications interface (SCI) operates in two modes: asynchronous with NRZ encoding, and synchronous.

The SCI (figure 31) is configured as follows :

Registers :
- Transmit/receive control/status registers 1 and 2 (TRCSR1, TRCSR2)
- Rate/mode control register (RMCR)
- Receive data register (RDR)
- Receive shift register
- Transmit data register (TDR)
- Transmit shift register

SCI I/O pins :
- SCLK ($P2_2$), input/output
- R_x ($P2_3$), input
- T_x ($P2_4$), output

Asynchronous Mode : The asynchronous mode has eight transfer frame formats with 7 or 8 data bits, 1 or 2 stop bits and parity or no parity (figure 32).

Setting TE in the TRCSR1 enables transmission, making $P2_4$ the serial output Tx regardless of the direction set in port 2's DDR. To transmit data, set the desired format in the RMCR and the TRCSR2. When TE is set, transmission can begin after a preamble for internal synchronization, consisting of one frame with all 1s for the data. At this stage, if the TDR is empty (TDRE=1), consecutive 1s are output to indicate the idle state. If the TDR contains data, it is sent to the transmit shift register and transmitted.

During data transmission, the SCI transmits a 0 start bit first, then the 7-or 8-bit data, starting with bit 0. When PEN of the TRCSR2=1, it sends the even or odd parity bit as selected by EOP. Lastly, the SCI sends one or two stop bits of 1.

When the TDR is empty, hardware sets the TDRE flag. If the CPU doesn't respond to the flag before the next data transfer to the transmit shift register should take place, a 1 is sent instead of the 0 start bit, and continues to transmit 1s (marking) until the CPU puts data in the TDR.

Setting the RE bit of the TRCSR1 enables reception, making $P2_3$ the serial input R_x. The TRCSR2 and the RMCR specify reception operation. The SCI uses the first 0 received as a start bit, and synchronizes the receive bit flow. Each following bit will be strobed in the middle.

If a stop bit is not 1, the SCI assumes a framing error, and sets ORFE. Then the received data is transferred to the RDR so the CPU can read it. This makes it possible to detect a line break. ORFE is cleared when the CPU reads the RDR after reading the TRCSR.

When PEN is set to 1, the SCI checks the parity bit. If the parity bit does not match the parity selected by EOP, the SCI set PER to indicate a parity error. The data can be read after a parity error, as with the framing error.

Table 13. Timer 2 Status Flag Set and Reset Conditions

Flag	Set Condition	Clear Condition
CMF	T2CNT=TCONR	• Write 0 to CMF, when CMF=1 • $\overline{RES}$=0

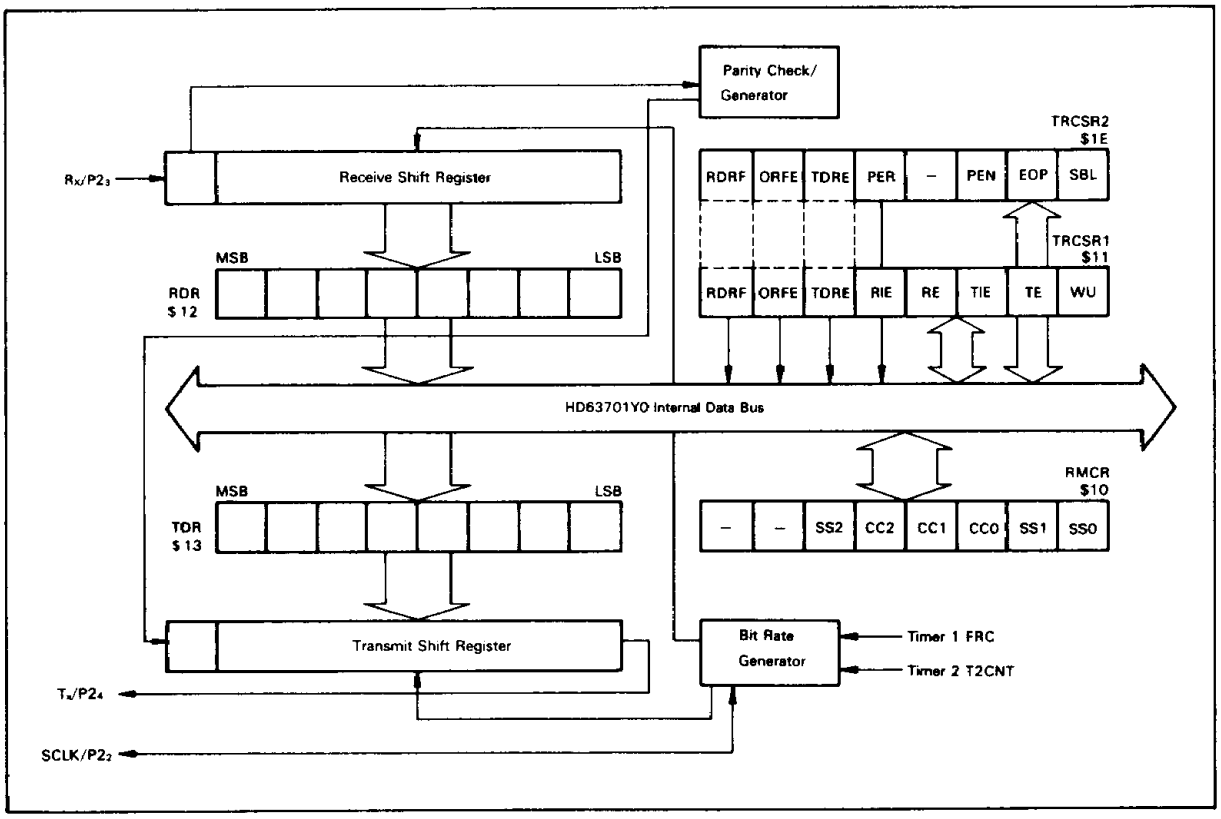

Figure 31. SCI Block Diagram

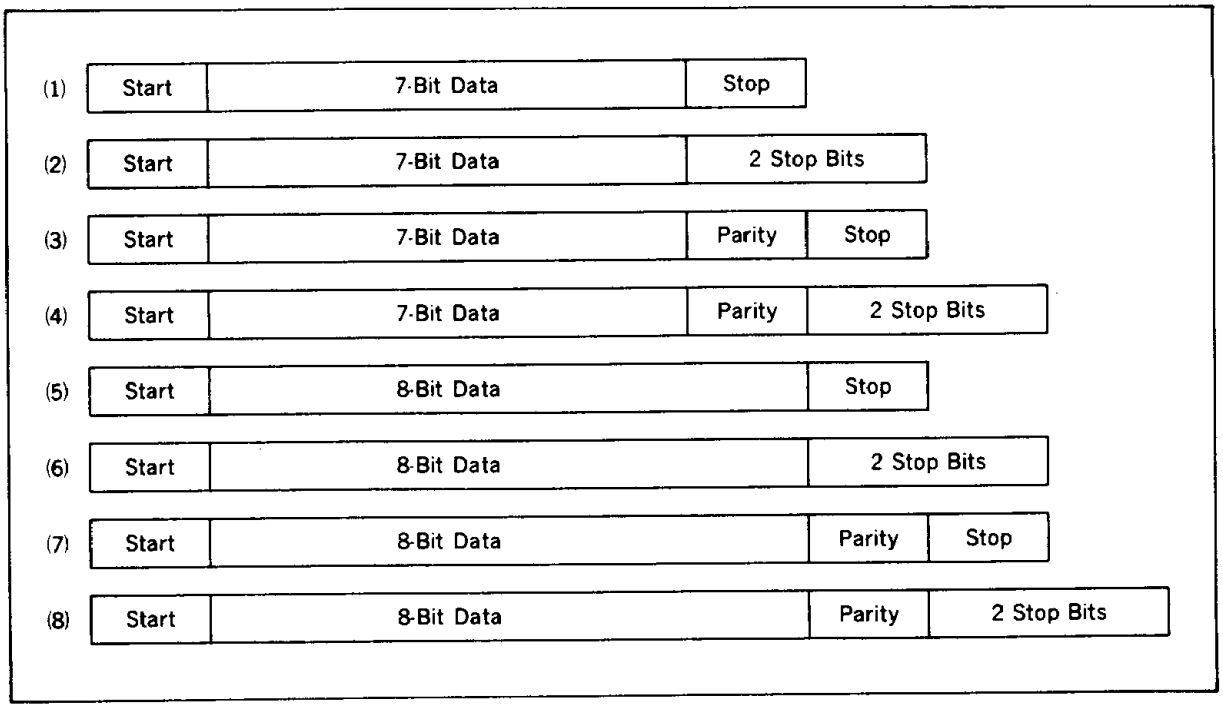

Figure 32. Asynchronous Formats

The SCI sets the RDRF flag if the frame is received without framing or parity errors. The CPU can get the received data by reading the RDR after reading the TRCSR, which clears RDRF. If RDRF is still set when the SCI is receiving the stop bit of the next frame, the SCI sets the ORFE flag to indicate an overflow error. In 7-bit data format, bit 8 is 0.

The clock source is selected by CC1 and CC0. If they are 10, the internal bit rate clock is output at $P2_2$, regardless of TE or RE. If they are 11, an external TTL-compatible clock must be connected to $P2_2$ at 16 times (16×) the desired bit rate, but not greater than E.

Synchronous Mode : In the clocked synchronous mode, data is transmitted synchronously with a clock pulse. Since the HD63701Y0 has an independent transmitter and receiver, full duplex operation is available, but only in asynchronous mode. In synchronous mode, $P2_2$ is the only clock pin, so simultaneous transmission and reception is impossible. TE and RE should therefore never be set to 1 at the same time. Figure 33 shows the clock and data format in synchronous mode.

Setting TE in TRCSR1 enables transmission, making $P2_4$ the serial output Tx regardless of the direction set in port 2's DDR. To transmit data, set the desired format in RMCR and TRCSR2. When an external clock is selected and TDRE is 0, the SCI transmits data from Tx, synchronized with 8 clock pulses input at SCLK. If clock output is selected, the SCI outputs transmit data and clock pulses.

The SCI transmits data starting with bit 0. TDRE is set when the transmit shift register is empty. After eight clock pulses, external clock pulses are ignored.

Setting the RE bit of the TRCSR1 enables reception, making $P2_3$ the serial input Rx. Reception operation is specified by the TRCSR2 and the RMCR.

If external clock input is selected, eight external clock pulses and synchronized data are input at Rx and SCLK. The SCI receives the data in the receive shift register by this clock, and sets the RDRF flag after it receives the eighth data bit. More than eight external clock pulses are ignored. When RDRF is cleared, the SCI starts receiving the next data immediately, so RDRF should be cleared when SCLK is high.

When clock output is selected, eight clocks are output from SCLK when RE is set. The external transmitter should synchronize to these clocks. Reception of the first byte of data sets RDRF. Clearing RDRF causes reception to continue by transmitting eight more clocks.

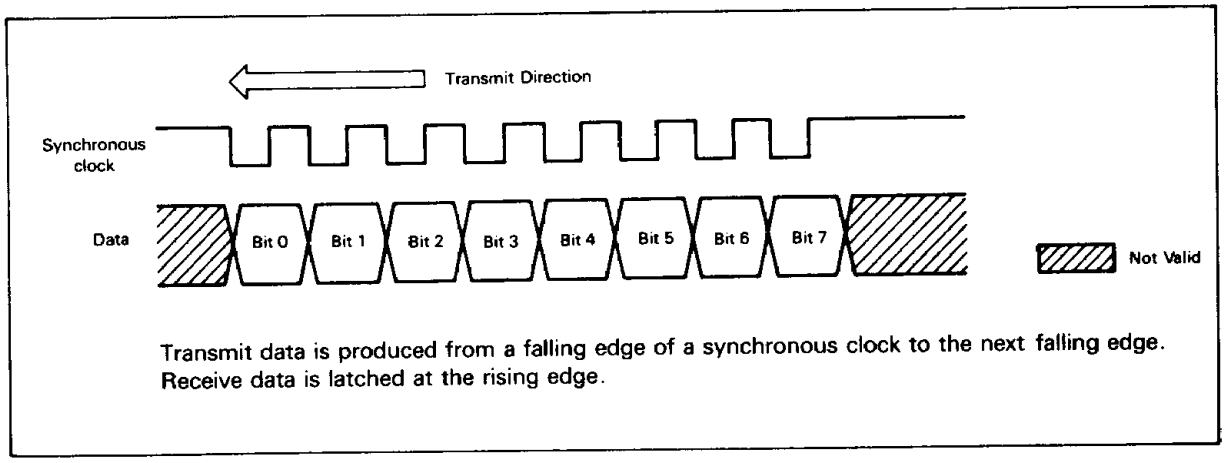

Figure 33. Synchronous Format

Transmit/Receive Control/Status Register 1: Transmit/receive control/status register 1 (TRCSR1: $0011; figure 34) has eight readable bits, four of which can also be written to. It is initialized to $20 at reset.

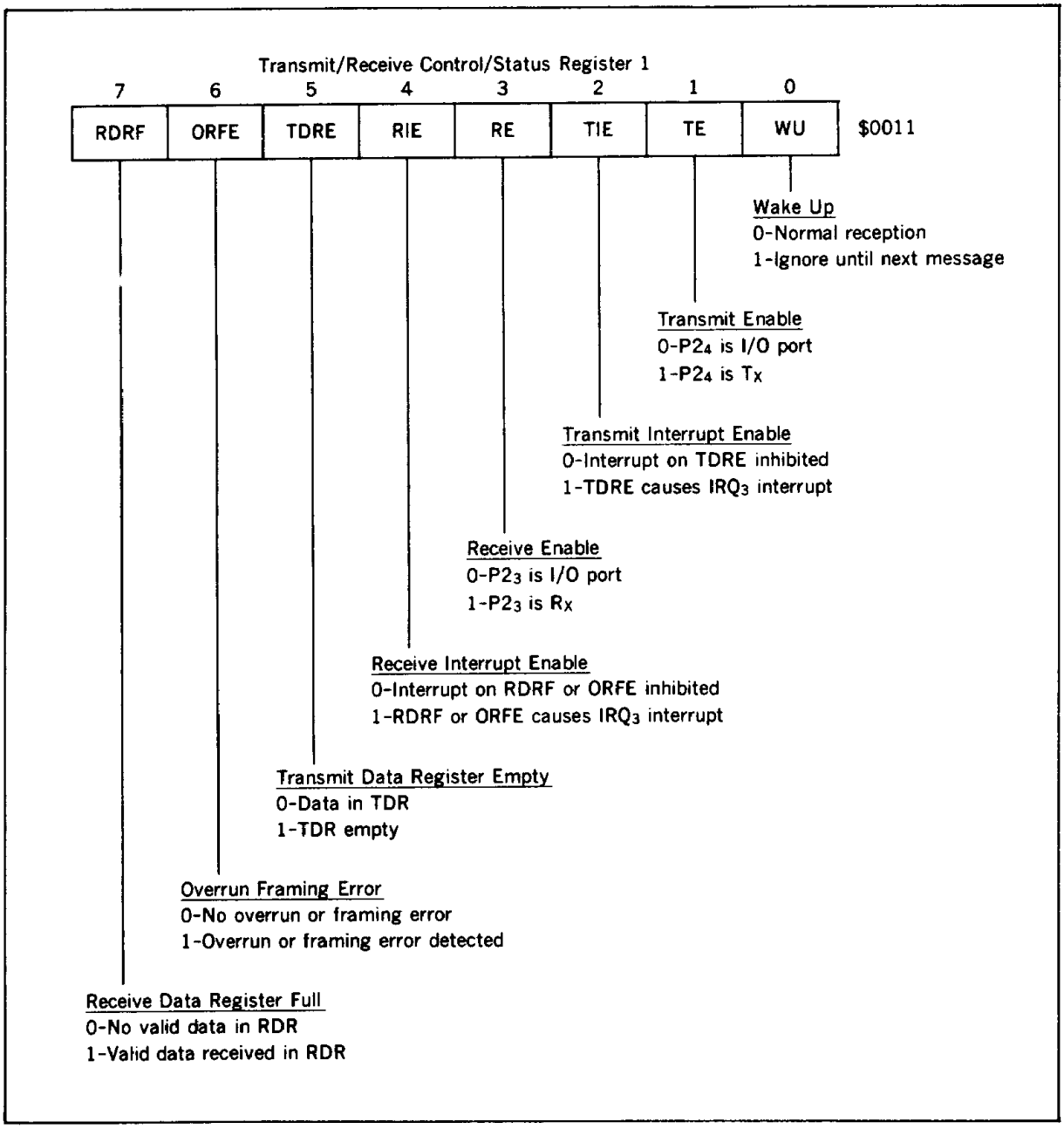

Figure 34. Transmit/Receive Control/Status Register 1

- WU: WU is the asynchronous mode wake-up function. When WU is set, the SCI stops receiving data until the next message. The reception of a frame of consecutive 1s wakes the SCI up, clears WU and starts reception. The RE flag should be set before setting WU. The wake-up function is not available in synchronous mode.

- TE: When TE is set, transmit data will appear at $Tx/P2_4$. It is preceded by a one-frame preamble in asynchronous mode, in synchronous mode it appears immediately.

- TIE: When TIE is set, TDRE set will cause an IRQ_3 interrupt. When it is cleared, the interrupt is inhibited. TIE is cleared at reset.

- RE: When RE is set, a signal is input at $Rx/P2_3$. When RE is cleared, $P2_2$ can be used as an I/O port.

- RIE: When RIE is set, RDRF or ORFE set will cause an IRQ_3 interrupt. When it is cleared, the interrupt is inhibited. RIE is cleared at reset.

- TDRE: The SCI sets TDRE when the TDR is transferred to the transmit shift register in the asynchronous mode, leaving the TDR empty. It is set in the synchronous mode when the transmit shift register is empty. TDRE is cleared by reading the TRCSR1 or the TRCSR2 and writing new data to the TDR while TDRE=1. TDRE is set to 1 at reset. The TDRE should be cleared in the transmit state after TE is set.

- ORFE: The SCI sets ORFE when an overrun or framing error occurs during data receive. ORFE is cleared by reading the TRCSR1 or the TRCSR2 and the RDR when ORFE=1. ORFE is cleared at reset.

- RDRF: The SCI sets RDRF when data is received normally and transferred from the receive shift register to the RDR. It is cleared by reading the TRCSR1 or the TRCSR2 and the RDR when RDRF=1. RDRF is cleared at reset.

Transmit/Receive Control/Status Register 2 : Transmit/receive control/status register 2 (TRCSR2 : $001E ; figure 35) has seven readable bits, the lower three of which can also be written to.

- SBL : When SBL is 0, 1 stop bit is selected for asynchronous mode. When SBL is 1, 2 stop bits are used. SBL is cleared at reset.

- EOP : EOP selects even or odd parity in asynchronous mode if PEN = 1. If EOP is 1, the SCI uses odd parity. If it is 0, the SCI uses even parity.

- PEN : If PEN is 1, the SCI generates and checks parity bits in the asynchronous mode. If it is 0, it uses no parity.

The above 3 bits (SBL, EOP, PEN) do not affect the SCI operation in the clocked synchronous mode.

- PER : PER is set when a parity error occurs. It is cleared by reading the RDR after reading the TRCSR2 with PER = 1.

- TDRE, ORFE, RDRF : TDRE, ORFE, RDRF are the same as in the TRCSR1. These bits can be accessed at either address.

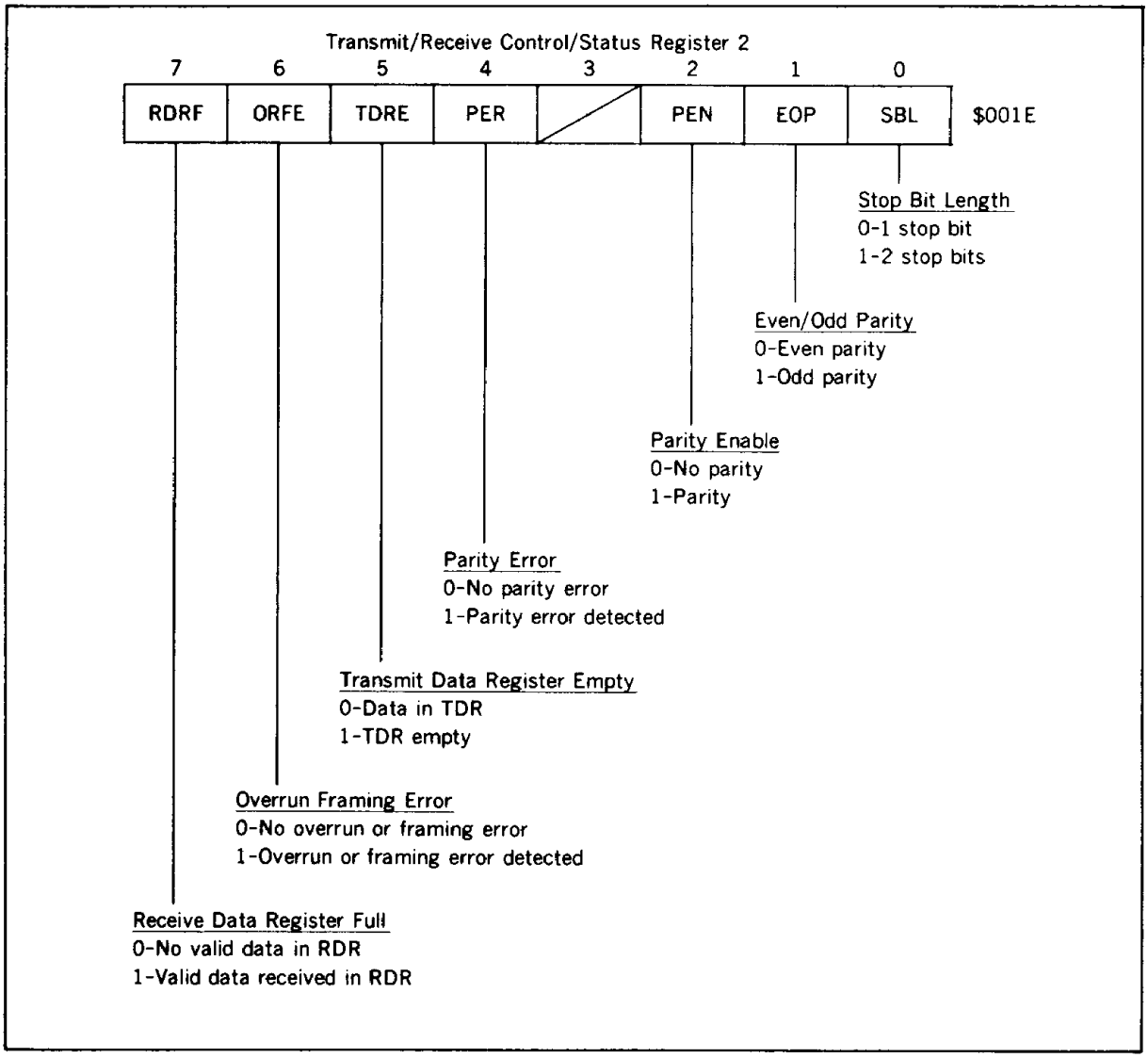

Figure 35. Transmit/Receive Control/Status Register 2

Transfer Rate/Mode Control Register : The 6-bit transfer rate/mode control register (RMCR: $0010; figure 36) controls the following SCI functions.

- Baud rate
- Clock source
- Operation mode
- Data format
- $P2_2$/SCLK function

All bits are read/write. Bits 0-6 are cleared at reset.

- SS0-SS2: SS0-SS2 select the transfer rate as shown in tables 14 and 15.
- CC0-CC2: CC0-CC2 control the data format and clock source as shown in table 16. CC0-CC2 are cleared at reset, putting the SCI into clock synchronous mode with external clock. This makes $P2_2$ into the serial clock input. To use $P2_2$ as an I/O port after reset, set CC1 and CC0 to 0, 1.

When using the SCI with an internal clock, do not write to the timer/counter which is the clock source for the SCI.

Table 17 shows the conditions that set and reset the SCI flags.

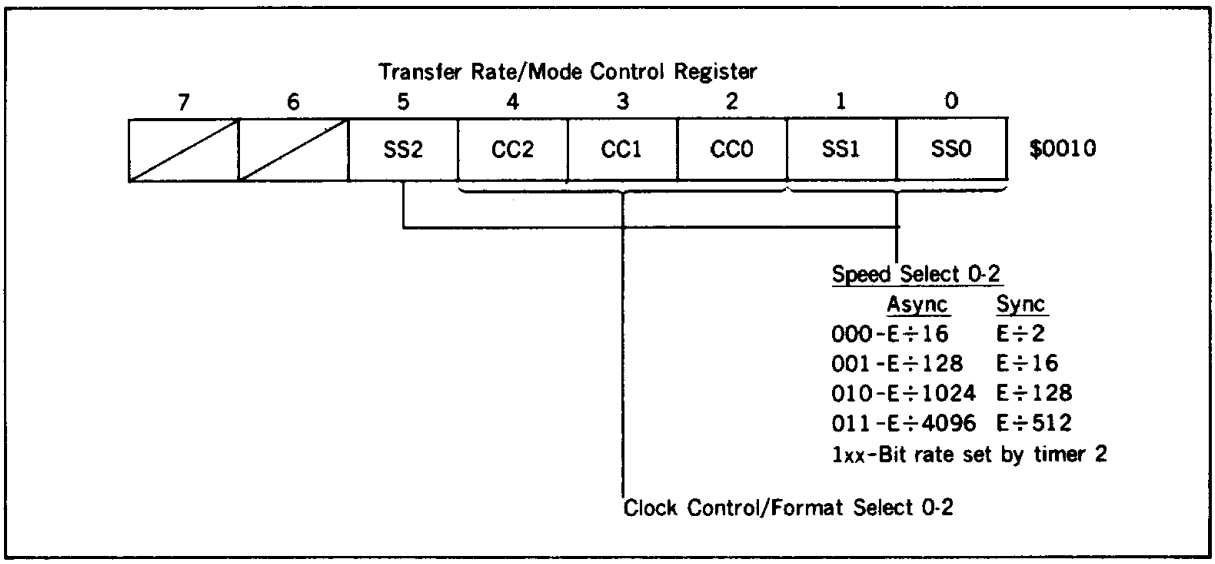

Figure 36. Transfer Rate/Mode Control Register

Table 14. SCI Bit Times and Transfer Rates

(1) Asynchronous Mode

			XTAL	2.4576 MHz	4.0 MHz	4.9152 MHz
SS2	SS1	SS0	E	614.4 kHz	1.0 MHz	1.2288 MHz
0	0	0	E÷16	26 μs/38400 Baud	16 μs/62500 Baud	13 μs/76800 Baud
0	0	1	E÷128	208 μs/4800 Baud	128 μs/7812.5 Baud	104.2 μs/9600 Baud
0	1	0	E÷1024	1.67 ms/600 Baud	1.024 ms/976.6 Baud	833.3 μs/1200 Baud
0	1	1	E÷4096	6.67 ms/150 Baud	4.096 ms/244.1 Baud	3.333 ms/300 Baud
1	—	—	—	*	*	*

*When SS2 is 1, timer 2 provides SCI clocks. The baud rate is shown as follows with the TCONR as N.

$$\text{Baud Rate} = \frac{f}{32(N+1)}$$

f: input clock frequency to the timer 2 counter
N=0—255

(2) Clocked Synchronous Mode*

			XTAL	4.0 MHz	6.0 MHz	8.0 MHz
SS2	SS1	SS0	E	1.0 MHz	1.5 MHz	2.0 MHz
0	0	0	E÷2	2 μs/bit	1.33 μs/bit	1 μs/bit
0	0	1	E÷16	16 μs/bit	10.7 μs/bit	8 μs/bit
0	1	0	E÷128	128 μs/bit	85.3 μs/bit	64 μs/bit
0	1	1	E÷512	512 μs/bit	341 μs/bit	256 μs/bit
1	—	—	—	* *	* *	* *

*Bit rates in the case of internal clock operation. In the case of external clock operation, the external clock is operatable up to DC to 1/2 system clock.

**The bit rate is shown as follows with the TCONR as N.

$$\text{Bit Rate}(\mu s/\text{bit}) = \frac{4(N+1)}{f}$$

f: input clock frequency to the timer 2 counter
N=0—255

Table 15. Baud Rate and TCONR Example

	XTAL				
Baud Rate (Baud)	2.4576 MHz	3.6864 MHz	4.0 MHz	4.9152 MHz	8.0 MHz
110	21*	32*	35*	43*	70*
150	127	191	207	255	51*
300	63	95	103	127	207
600	31	47	51	63	103
1200	15	23	25	31	51
2400	7	11	12	15	25
4800	3	5	—	7	12
9600	1	2	—	3	—
19200	0	—	—	1	—
38400	—	—	—	0	—

*E/8 clock is input to the timer 2 up counter. E clock for all others.

Table 16. SCI Format and Clock Source

CC2	CC1	CC0	Mode	Transmit Format	Clock Source
0	0	0	Clock Sync	8-bit data	Ext
0	0	1	Async	8-bit data	Int
0	1	0	Async	8-bit data	Int
0	1	1	Async	8-bit data	Ext
1	0	0	Clock Sync	8-bit data	Int
1	0	1	Async	7-bit data	Int
1	1	0	Async	7-bit data	Int
1	1	1	Async	7-bit data	Ext

Table 17. SCI Status Flags Set and Reset Conditions

Flag	Set Condition	Clear Condition
RDRF	Receive shift register→RDR	• Read the TRCSR1 or TRCSR2 then RDR, when RDRF=1 • $\overline{RES}$=0
ORFE	• Framing error (Asynchronous mode) Stop bit=0 • Overrun error (Asynchronous mode) Receive shift register→RDR when RDRF=1	• Read the TRCSR1 or TRCSR2 then RDR, when ORFE=1 • $\overline{RES}$=0
TDRE	• Asynchronous mode TDR→Transmit shift register • Clocked synchronous mode Transmit shift register is "empty" • $\overline{RES}$=0	• Read the TRCSR1 or TRCSR2 then write to the TDR, when TDRE=1 Note: TDRE should be reset after the TE is set.
PER	Parity when PEN=1	• Read the TRCSR2 then RDR, when PER=1 • $\overline{RES}$=0

EPROM Operation

The HD63701Y0's on-chip EPROM is programmed in the EPROM mode (figures 37 and 38). EPROM mode is set by bringing MP_0, MP_1, and $\overline{STBY}$ low. In PROM mode, the MCU doesn't operate. It can be programmed like a standard 27256 EPROM using a standard EPROM programmer and a socket adapter. Table 18 lists recommended EPROM programmers and socket adapters.

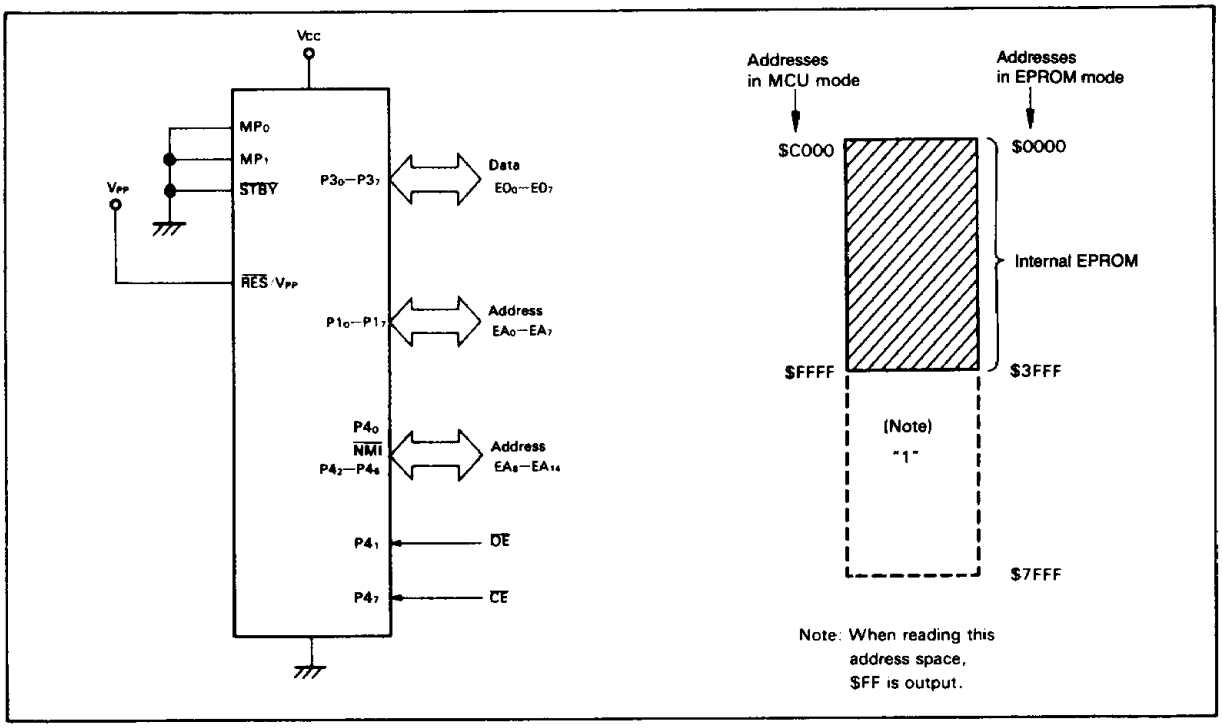

Figure 37. EPROM Mode Functional Diagram and Memory Map

Table 18. EPROM Programmers and Socket Adapters

EPROM Programmer		Socket Adapter	
			Type Name
Maker	Type Name	Maker	Part Number
DATA I/O	121B	Hitachi	HS31YESS11H
	22B		
	29B		
AVAL Corp	PKW-1000		HS31YESS21H

Table 19. EPROM Mode Selection

	Pin			
Mode	$\overline{CE}$	$\overline{OE}$	V_{PP}	EO_0—EO_7
Programming	Low	High	V_{PP}	Data input
Verify	High	Low	V_{PP}	Data output
Programming inhibited	High	High	V_{PP}	High impedance

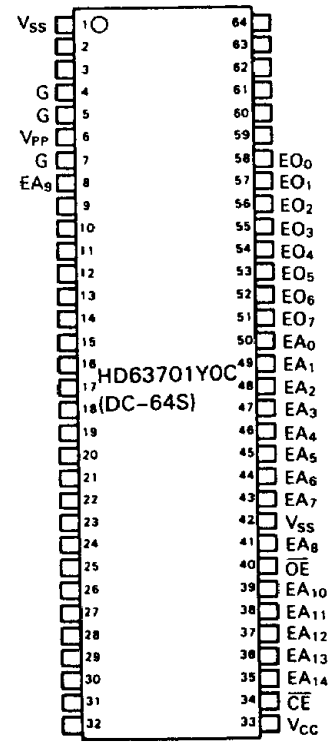

(Top View)

Figure 38. EPROM Mode Pin Arrangement

Programming and Verification

The HD63701Y0 can be high-speed programmed without causing voltage stress or affecting data reliability. Table 19 shows how programming and verification modes are selected. Figure 39 is a programming flowchart, and figure 54 is a timing chart.

Since the HD63701Y0 has a 16k byte capacity, when programming start at address $0000 and end at $3FFF (figure 37), and data from address $4000 to $7FFF should be programmed $FF.

Erasing

The EPROM on HD63701Y0s in ceramic "window" packages can be erased by ultraviolet light. All erased bits become 1s.

Erasing conditions are: ultraviolet (UV) light with wavelength 2537 Å with a minimum irradiation of 15 W·s/cm². These conditions are satisfied by exposing the LSI to a 12,000μW/cm² UV source for 15-20 minutes, at a distance of 1 inch.

Precautions

Note that the ceramic package HD63701Y0 can be erased and reprogrammed, but the plastic package type cannot.

If an attempt is made to access addresses of $4000 or higher, the EPROM may not be programmed or verified correctly.

Be careful that the EPROM programmer, socket adapter and LSI match. Using the wrong programmer of socket adapter may cause an overvoltage and damage the LSI. Make sure that the LSI is firmly fixed in the socket adapter, and that the socket adapter is firmly fixed in the programmer.

The EPROM should be programmed with V_{PP}=12.5 V. Other PROMs use 21 V. If 21 V is applied to the HD63701Y0, the LSI may be permanently damaged. 12.5 V is Intel's 27256 V_{PP} specification.

To avoid erasure, shield the window of ceramic-package HD63701Y0s from UV light and electrostatic charges. Conductive, UV-opaque labels are available for this purpose.

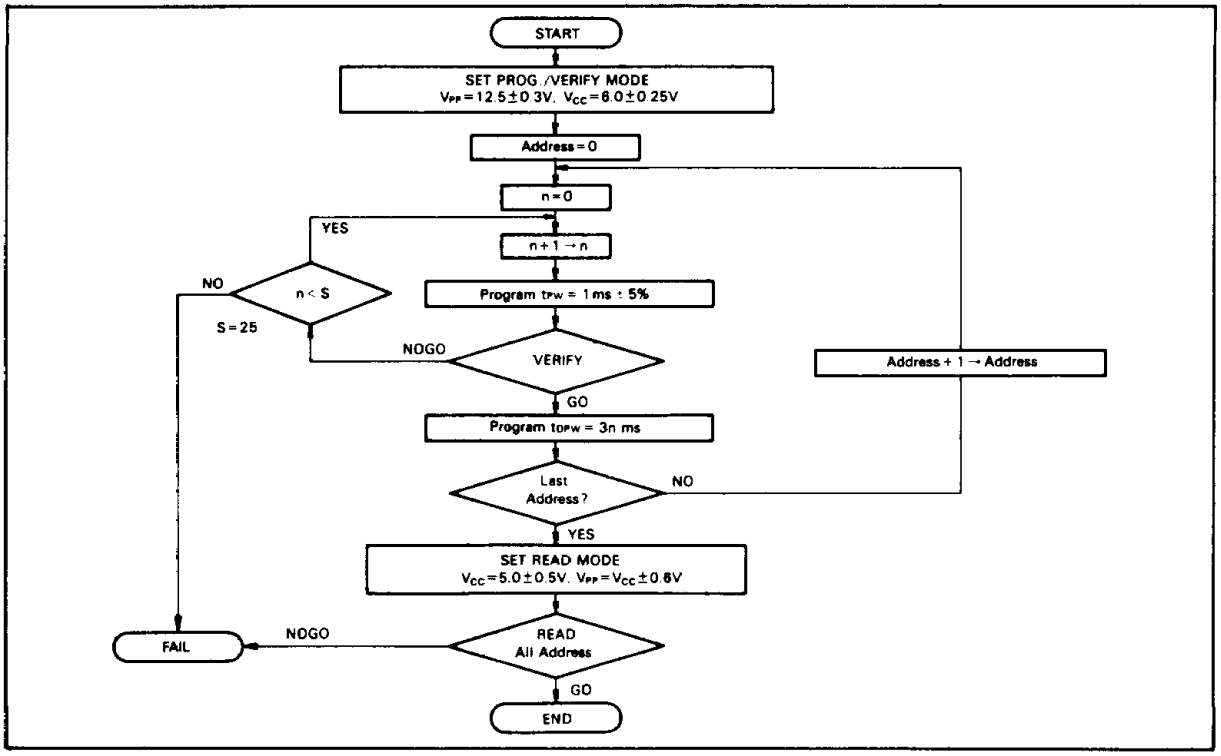

Figure 39. High-Speed Programming Flowchart

Instruction Set

HD63701Y0 object code is upwardly compatible with the HD6801 to use the entire instruction set of the HMCS6800. It also reduces the execution times of key instructions to improve throughput. Bit manipulation, index and accumulator change, and sleep instructions have also been added.

Addressing Modes

The HD63701Y0 provides 7 addressing modes.

Accumulator (ACCX) Addressing: Only one accumulator, A or B, is selected. These are one-byte instructions.

Immediate Addressing: The data is located in the second byte of the instruction, except for LDS and LDX, where the data is in the second and third bytes. These are two-or three-byte instructions.

Direct Addressing: The second byte of the instruction is the address that the data is stored at. Bytes $00 through $FF (0-255) can be addressed directly. Storing data in this area reduces execution time, so it is suggested that $00-$FF by used as user's data storage when configuring a system. These are two-byte instructions, or three bytes for AIM, OIM, EIM, or TIM.

Extended Addressing: The second byte is the upper 8 bits of the data's absolute address, and the third byte is the lower 8 bits. These are three-byte instructions.

Indexed Addressing: The lower eight bits of the index register are added to the second byte of the instruction (third byte for AIM, OIM, EIM, or TIM). The carry is added to the upper byte of the index register and the result is put in the temporary address register so the index register contents don't change. This result is the address of the data. These are two-byte instructions, or three bytes for AIM, OIM, EIM, or TIM.

Implied Addressing: The instruction only addresses particular operands, such as the stack pointer, or index register. These are one-dyte instructions.

Relative Addressing: The second byte of the instruction is added to the lower eight bits of the program counter. The carry or borrow is added to the upper 8 bits. This allows addresses from −126 to +129 bytes from the current instruction to be accessed. These are two-byte instructions.

Instruction Set Summary

Table 20 shows the general operation of each instruction. Table 21 is an opcode map. Table 22 shows the detailed operation of the instructions.

Table 20. Instruction Set Summary
Accumulator, Memory Manipulation Instructions

Operations	Mnemonic	Addressing Modes															Boolean/ Arithmetic Operation	Condition Code Register					
		IMMED			DIRECT			INDEX			EXTEND			IMPLIED				5	4	3	2	1	0
		OP	~	#	OP	~	#	OP	~	#	OP	~	#	OP	~	#		H	I	N	Z	V	C
Add	ADDA	8B	2	2	9B	3	2	AB	4	2	BB	4	3				A+M→A	↕	●	↕	↕	↕	↕
	ADDB	CB	2	2	DB	3	2	EB	4	2	FB	4	3				B+M→B	↕	●	↕	↕	↕	↕
Add Double	ADDD	C3	3	3	D3	4	2	E3	5	2	F3	5	3				A : B+M : M+1 → A : B	●	●	↕	↕	↕	↕
Add Accumulators	ABA													1B	1	1	A+B→A	↕	●	↕	↕	↕	↕
Add With Carry	ADCA	89	2	2	99	3	2	A9	4	2	B9	4	3				A+M+C→A	↕	●	↕	↕	↕	↕
	ADCB	C9	2	2	D9	3	2	E9	4	2	F9	4	3				B+M+C→B	↕	●	↕	↕	↕	↕
AND	ANDA	84	2	2	94	3	2	A4	4	2	B4	4	3				A・M→B	●	●	↕	↕	R	●
	ANDB	C4	2	2	D4	3	2	E4	4	2	F4	4	3				B・M→B	●	●	↕	↕	R	●
Bit Test	BIT A	85	2	2	95	3	2	A5	4	2	B5	4	3				A・M	●	●	↕	↕	R	●
	BIT B	C5	2	2	D5	3	2	E5	4	2	F5	4	3				B・M	●	●	↕	↕	R	●
Clear	CLR							6F	5	2	7F	5	3				00→M	●	●	R	S	R	R
	CLRA													4F	1	1	00→A	●	●	R	S	R	R
	CLRB													5F	1	1	00→B	●	●	R	S	R	R
Compare	CMPA	81	2	2	91	3	2	A1	4	2	B1	4	3				A−M	●	●	↕	↕	↕	↕
	CMPB	C1	2	2	D1	3	2	E1	4	2	F1	4	3				B−M	●	●	↕	↕	↕	↕
Compare Accumulators	CBA													11	1	1	A−B	●	●	↕	↕	↕	↕
Complement, 1's	COM							63	6	2	73	6	3				$\overline{M}$→M	●	●	↕	↕	R	S
	COMA													43	1	1	$\overline{A}$→A	●	●	↕	↕	R	S
	COMB													53	1	1	$\overline{B}$→B	●	●	↕	↕	R	S
Complement, 2's (Negate)	NEG							60	6	2	70	6	3				00−M→M	●	●	↕	↕	①	②
	NEGA													40	1	1	00−A→A	●	●	↕	↕	①	②
	NEGB													50	1	1	00−B→B	●	●	↕	↕	①	②
Decimal Adjust, A	DAA													19	2	1	Converts binary add of BCD characters into BCD format	●	●	↕	↕	↕	③
Decrement	DEC							6A	6	2	7A	6	3				M−1→M	●	●	↕	↕	④	●
	DECA													4A	1	1	A−1→A	●	●	↕	↕	④	●
	DECB													5A	1	1	B−1→B	●	●	↕	↕	④	●
Exclusive OR	EORA	88	2	2	98	3	2	A8	4	2	B8	4	3				A⊕M→A	●	●	↕	↕	R	●
	EORB	C8	2	2	D8	3	2	E8	4	2	F8	4	3				B⊕M→B	●	●	↕	↕	R	●
Increment	INC							6C	6	2	7C	6	3				M+1→M	●	●	↕	↕	⑤	●
	INCA													4C	1	1	A+1→A	●	●	↕	↕	⑤	●
	INCB													5C	1	1	B+1→B	●	●	↕	↕	⑤	●
Load Accumulator	LDAA	86	2	2	96	3	2	A6	4	2	B6	4	3				M→A	●	●	↕	↕	R	●
	LDAB	C6	2	2	D6	3	2	E6	4	2	F6	4	3				M→B	●	●	↕	↕	R	●
Load Double Accumulator	LDD	CC	3	3	DC	4	2	EC	5	2	FC	5	3				M+1→B, M→A	●	●	↕	↕	R	●
Multiply Unsigned	MUL													3D	7	1	A×B→A : B	●	●	●	●	●	⑪
OR, Inclusive	ORAA	8A	2	2	9A	3	2	AA	4	2	BA	4	3				A+M→A	●	●	↕	↕	R	●
	ORAB	CA	2	2	DA	3	2	EA	4	2	FA	4	3				B+M→B	●	●	↕	↕	R	●
Push Data	PSHA													36	4	1	A→Msp, SP−1→SP	●	●	●	●	●	●
	PSHB													37	4	1	B→Msp, SP−1→SP	●	●	●	●	●	●

(continued)

Accumulator, Memory Manipulation Instructions (Cont)

Operations	Mnemonic	Addressing Modes															Boolean/ Arithmetic Operation	Condition Code Register					
		IMMED			DIRECT			INDEX			EXTEND			IMPLIED				5	4	3	2	1	0
		OP	~	#	OP	~	#	OP	~	#	OP	~	#	OP	~	#		H	I	N	Z	V	C
Pull Data	PULA													32	3	1	SP+1→SP, Msp→A	●	●	●	●	●	●
	PULB													33	3	1	SP+1→SP, Msp→B	●	●	●	●	●	●
Rotate Left	ROL							69	6	2	79	6	3					●	●	↕	↕	⑥	↕
	ROLA													49	1	1		●	●	↕	↕	⑥	↕
	ROLB													59	1	1		●	●	↕	↕	⑥	↕
Rotate Right	ROR							66	6	2	76	6	3					●	●	↕	↕	⑥	↕
	RORA													46	1	1		●	●	↕	↕	⑥	↕
	RORB													56	1	1		●	●	↕	↕	⑥	↕
Shift Left Arithmetic	ASL							68	6	2	78	6	3					●	●	↕	↕	⑥	↕
	ASLA													48	1	1		●	●	↕	↕	⑥	↕
	ASLB													58	1	1		●	●	↕	↕	⑥	↕
Double Shift Left, Arithmetic	ASLD													05	1	1		●	●	↕	↕	⑥	↕
Shift Right Arithmetic	ASR							67	6	2	77	6	3					●	●	↕	↕	⑥	↕
	ASRA													47	1	1		●	●	↕	↕	⑥	↕
	ASRB													57	1	1		●	●	↕	↕	⑥	↕
Shift Right Logical	LSR							64	6	2	74	6	3					●	●	R	↕	⑥	↕
	LSRA													44	1	1		●	●	R	↕	⑥	↕
	LSRB													54	1	1		●	●	R	↕	⑥	↕
Double Shift Right Logical	LSRD													04	1	1		●	●	R	↕	⑥	↕
Store Accumulator	STAA				97	3	2	A7	4	2	B7	4	3				A→M	●	●	↕	↕	R	●
	STAB				D7	3	2	E7	4	2	F7	4	3				B→M	●	●	↕	↕	R	●
Store Double Accumulator	STD				DD	4	2	ED	5	2	FD	5	3				A→M B→M+1	●	●	↕	↕	R	●
Subtract	SUBA	80	2	2	90	3	2	A0	4	2	B0	4	3				A−M→A	●	●	↕	↕	↕	↕
	SUBB	C0	2	2	D0	3	2	E0	4	2	F0	4	3				B−M→B	●	●	↕	↕	↕	↕
Double Subtract	SUBD	83	3	3	93	4	2	A3	5	2	B3	5	3				A : B−M : M+1→ A : B	●	●	↕	↕	↕	↕
Subtract Accumulators	SBA													10	1	1	A−B→A	●	●	↕	↕	↕	↕
Sabtract With Carry	SBCA	82	2	2	92	3	2	A2	4	2	B2	4	3				A−M−C→A	●	●	↕	↕	↕	↕
	SBCB	C2	2	2	D2	3	2	E2	4	2	F2	4	3				B−M−C→B	●	●	↕	↕	↕	↕
Transfer Accumulators	TAB													16	1	1	A→B	●	●	↕	↕	R	●
	TBA													17	1	1	B→A	●	●	↕	↕	R	●
Test Zero or Minus	TST							6D	4	2	7D	4	3				M−00	●	●	↕	↕	R	R
	TSTA													4D	1	1	A−00	●	●	↕	↕	R	R
	TSTB													5D	1	1	B−00	●	●	↕	↕	R	R
And Immediate	AIM				71	6	3	61	7	3							M · IMM→M	●	●	↕	↕	R	●
OR Immediate	OIM				72	6	3	62	7	3							M+IMM→M	●	●	↕	↕	R	●
EOR Immediate	EIM				75	6	3	65	7	3							M⊕IMM→M	●	●	↕	↕	R	●
Test Immediate	TIM				7B	4	3	6B	5	3							M · IMM	●	●	↕	↕	R	●

Index Register, Stack Manipulation Instructions

Pointer Operations	Mnemonic	Addressing Modes															Boolean/ Arithmetic Operation	Condition Code Register					
		IMMED			DIRECT			INDEX			EXTEND			IMPLIED				5	4	3	2	1	0
		OP	~	#	OP	~	#	OP	~	#	OP	~	#	OP	~	#		H	I	N	Z	V	C
Compare Index Reg	CPX	8C	3	3	9C	4	2	AC	5	2	BC	5	3				X−M:M+1	•	•	↕	↕	↕	↕
Decrement Index Reg	DEX													09	1	1	X−1→X	•	•	•	↕	•	•
Decrement Stack Pntr	DES													34	1	1	SP−1→SP	•	•	•	•	•	•
Increment Index Reg	INX													08	1	1	X+1→X	•	•	•	↕	•	•
Increment Stack Pntr	INS													31	1	1	SP+1→SP	•	•	•	•	•	•
Load Index Reg	LDX	CE	3	3	DE	4	2	EE	5	2	FE	5	3				M→X_H, (M+1)→X_L	•	•	⑦	↕	R	•
Load Stack Pntr	LDS	8E	3	3	9E	4	2	AE	5	2	BE	5	3				M→SP_H, (M+1)→SP_L	•	•	⑦	↕	R	•
Store Index Reg	STX				DF	4	2	EF	5	2	FF	5	3				X_H→M, X_L→(M+1)	•	•	⑦	↕	R	•
Store Stack Pntr	STS				9F	4	2	AF	5	2	BF	5	3				SP_H→M, SP_L→(M+1)	•	•	⑦	↕	R	•
Index Reg → Stack Pntr	TXS													35	1	1	X−1→SP	•	•	•	•	•	•
Stack Pntr→Index Reg	TSX													30	1	1	SP+1→X	•	•	•	•	•	•
Add	ABX													3A	1	1	B+X→X	•	•	•	•	•	•
Push Data	PSHX													3C	5	1	X_L→Msp, SP−1→SP X_H→Msp, SP−1→SP	•	•	•	•	•	•
Pull Data	PULX													38	4	1	SP+1→SP, Msp→X_H SP+1→SP, Msp→X_L	•	•	•	•	•	•
Exchange	XGDX													18	2	1	ACCD↔IX	•	•	•	•	•	•

Jump, Branch Instructions

Operations	Mnemonic	Addressing Modes														Branch Test	Condition Code Register					
		RELATIVE			DIRECT			INDEX			EXTEND			IMPLIED			5	4	3	2	1	0
		OP	~	#	OP	~	#	OP	~	#	OP	~	#	OP	~	#		H	I	N	Z	V	C
Branch Always	BRA	20	3	2													None	●	●	●	●	●	●
Branch Never	BRN	21	3	2													None	●	●	●	●	●	●
Branch if Carry Clear	BCC	24	3	2													C=0	●	●	●	●	●	●
Branch if Carry Set	BCS	25	3	2													C=1	●	●	●	●	●	●
Branch if=Zero	BEQ	27	3	2													Z=1	●	●	●	●	●	●
Branch if≧Zero	BGE	2C	3	2													N⊕V=0	●	●	●	●	●	●
Branch if>Zero	BGT	2E	3	2													Z+(N⊕V)=0	●	●	●	●	●	●
Branch if Higher	BHI	22	3	2													C+Z=0	●	●	●	●	●	●
Branch if≦Zero	BLE	2F	3	2													Z+(N⊕V)=1	●	●	●	●	●	●
Branch if Lower Or Same	BLS	23	3	2													C+Z=1	●	●	●	●	●	●
Branch if<Zero	BLT	2D	3	2													N⊕V=1	●	●	●	●	●	●
Branch if Minus	BMI	2B	3	2													N=1	●	●	●	●	●	●
Branch if Not Equal Zero	BNE	26	3	2													Z=0	●	●	●	●	●	●
Branch if Overflow Clear	BVC	28	3	2													V=0	●	●	●	●	●	●
Branch if Overflow Set	BVS	29	3	2													V=1	●	●	●	●	●	●
Branch if Plus	BPL	2A	3	2													N=0	●	●	●	●	●	●
Branch To Subroutine	BSR	8D	5	2														●	●	●	●	●	●
Jump	JMP							6E	3	2	7E	3	3					●	●	●	●	●	●
Jump To Subroutine	JSR				9D	5	2	AD	5	2	BD	6	3					●	●	●	●	●	●
No Operation	NOP													01	1	1	Advances Prog. Cntr. Only	●	●	●	●	●	●
Return From Interrupt	RTI													3B	10	1		—— ⑧ ——					
Return From Subroutine	RTS													39	5	1		●	●	●	●	●	●
Software Interrupt	SWI													3F	12	1		●	S	●	●	●	●
Wait for Interrupt*	WAI													3E	9	1		●	⑨	●	●	●	●
Sleep	SLP													1A	4	1		●	●	●	●	●	●

Note: *WAI puts R/$\overline{W}$ high; Address Bus goes to FFFF; Data Bus goes to the three state.

Condition Code Register Manipulation Instructions

Operations	Mnemonic	Addressing Modes IMPLIED OP	~	#	Boolean Operation	Condition Code Register 5 H	4 I	3 N	2 Z	1 V	0 C
Clear Carry	CLC	0C	1	1	0→C	●	●	●	●	●	R
Clear Interrupt Mask	CLI	0E	1	1	0→I	●	R	●	●	●	●
Clear Overflow	CLV	0A	1	1	0→V	●	●	●	●	R	●
Sat Carry	SEC	0D	1	1	1→C	●	●	●	●	●	S
Set Interrupt Mask	SEI	0F	1	1	1→I	●	S	●	●	●	●
Set Overflow	SEV	0B	1	1	1→V	●	●	●	●	S	●
Accumulator A→CCR	TAP	06	1	1	A→CCR	——⑩——					
CCR→Accumulator A	TPA	07	1	1	CCR→A	●	●	●	●	●	●

—— Description of symbols ——

Legend:

OP Operation Code (Hexadecimal)
~ Number of MCU Cycles
M_{sp} Contents of memory location pointed by Stack Pointer
Number of Program Bytes
+ Arithmetic plus
− Arithmetic Minus
● Boolean AND
✚ Boolean Inclusive OR
⊕ Boolean Exclusive OR
$\overline{M}$ Complement of M
→ Transfer into
0 Bit=Zero
00 Byte=Zero

Condition Code Symbols:

H Half-carry from bit 3 to bit 4
I Interrupt mask
N Negative (sign bit)
Z Zero (byte)
V Overflow, 2's complement
C Carry/Borrow from/to bit 7
R Reset Always
S Set Always
↕ Set if true after test or clear
● Not Affected

Note: Condition Code Register Notes : (Bit set if test is true and cleared otherwise)

① (Bit V) Test : Result=10000000?
② (Bit C) Test : Result≠00000000?
③ (Bit C) Test : BCD Character of high-order byte greater than 10? (Not cleared if previously set.)
④ (Bit V) Test : Operand=10000000 prior to execution?
⑤ (Bit V) Test : Operand=01111111 prior to execution?
⑥ (Bit V) Test : Set equal to N⊕C=1 after the execution of instructions
⑦ (Bit N) Test : Result less than zero? (Bit 15=1)
⑧ (All Bit) Load Condition Code Register from Stack.
⑨ (Bit I) Set when interrupt occurs. If previously set, a Non-Maskable Interrupt is required to exit the wait state.
⑩ (All Bit) Set according to the contents of Accumulator A.
⑪ (Bit C) Result of Multiplication Bit 7=1? (ACCB)

Table 21. Opcode Map

OP CODE						ACC A	ACC B	IND	EXT/DIR*	ACCA or SP				ACCB or X				
										IMM	DIR	IND	EXT	IMM	DIR	IND	EXT	
	HI	0000	0001	0010	0011	0100	0101	0110	0111	1000	1001	1010	1011	1100	1101	1110	1111	
LO		0	1	2	3	4	5	6	7	8	9	A	B	C	D	E	F	
0000	0		SBA	BRA	TSX	NEG				SUB								0
0001	1	NOP	CBA	BRN	INS			AIM		CMP								1
0010	2			BHI	PULA			OIM		SBC								2
0011	3			BLS	PULB	COM				SUBD				ADDD				3
0100	4	LSRD		BCC	DES	LSR				AND								4
0101	5	ASLD		BCS	TXS			EIM		BIT								5
0110	6	TAP	TAB	BNE	PSHA	ROR				LDA								6
0111	7	TPA	TBA	BEQ	PSHB	ASR					STA				STA			7
1000	8	INX	XGDX	BVC	PULX	ASL				EOR								8
1001	9	DEX	DAA	BVS	RTS	ROL				ADC								9
1010	A	CLV	SLP	BPL	ABX	DEC				ORA								A
1011	B	SEV	ABA	BMI	RTI			TIM		ADD								B
1100	C	CLC		BGE	PSHX	INC				CPX				LDD				C
1101	D	SEC		BLT	MUL	TST				BSR	JSR				STD			D
1110	E	CLI		BGT	WAI			JMP		LDS				LDX				E
1111	F	SEI		BLE	SWI	CLR					STS				STX			F
		0	1	2	3	4	5	6	7	8	9	A	B	C	D	E	F	

Notes: 1. Undefined Opcode
2. *Only each instructions of AIM, OIM, EIM, TIM

Table 22. Cycle-by-Cycle Operation

Address Mode & Instructions	Cycles	Cycle #	Address Bus	R/$\overline{W}$	$\overline{RD}$	$\overline{WR}$	$\overline{LIR}$	Data Bus
IMMEDIATE								
ADC ADD AND BIT CMP EOR LDA ORA SBC SUB	2	1	Op Code Address+1	1	0	1	1	Operand Data
		2	Op Code Address+2	1	0	1	0	Next Op Code
ADDD CPX LDD LDS LDX SUBD	3	1	Op Code Address+1	1	0	1	1	Operand Data (MSB)
		2	Op Code Address+2	1	0	1	1	Operand Data (LSB)
		3	Op Code Address+3	1	0	1	0	Next Op Code
DIRECT								
ADC ADD AND BIT CMP EOR LDA ORA SBC SUB	3	1	Op Code Address+1	1	0	1	1	Address of Operand (LSB)
		2	Address of Operand	1	0	1	1	Operand Data
		3	Op Code Address+2	1	0	1	0	Next Op Code
STA	3	1	Op Code Address+1	1	0	1	1	Destination Address
		2	Destination Address	0	1	0	1	Accumulator Data
		3	Op Code Address+2	1	0	1	0	Next Op Code
ADDD CPX LDD LDS LDX SUBD	4	1	Op Code Address+1	1	0	1	1	Address of Operand (LSB)
		2	Address of Operand	1	0	1	1	Operand Data (MSB)
		3	Address of Operand+1	1	0	1	1	Operand Data (LSB)
		4	Op Code Address+2	1	0	1	0	Next Op Code
STD STS STX	4	1	Op Code Address+1	1	0	1	1	Destination Address (LSB)
		2	Destination Address	0	1	0	1	Register Data (MSB)
		3	Destination Address+1	0	1	0	1	Register Data (LSB)
		4	Op Code Address+2	1	0	1	0	Next Op Code
JSR	5	1	Op Code Address+1	1	0	1	1	Jump Address (LSB)
		2	FFFF	1	1	1	1	Restart Address (LSB)
		3	Stack Pointer	0	1	0	1	Return Address (LSB)
		4	Stack Pointer−1	0	1	0	1	Return Address (MSB)
		5	Jump Address	1	0	1	0	First Subroutine Op Code
TIM	4	1	Op Code Address+1	1	0	1	1	Immediate Data
		2	Op Code Address+2	1	0	1	1	Address of Operand (LSB)
		3	Address of Operand	1	0	1	1	Operand Data
		4	Op Code Address+3	1	0	1	0	Next Op Code
AIM EIM OIM	6	1	Op Code Address+1	1	0	1	1	Immediate Data
		2	Op Code Address+2	1	0	1	1	Address of Operand (LSB)
		3	Address of Operand	1	0	1	1	Operand Data
		4	FFFF	1	1	1	1	Restart Address (LSB)
		5	Address of Operand	0	1	0	1	New Operand Data
		6	Op Code Address+3	1	0	1	0	Next Op Code

(continued)

Table 22. Cycle-by-Cycle Operation (Cont)

Address Mode & Instructions	Cycles	Cycle #	Address Bus	R/$\overline{W}$	$\overline{RD}$	$\overline{WR}$	$\overline{LIR}$	Data Bus
INDEXED								
JMP	3	1	Op Code Address+1	1	0	1	1	Offset
		2	FFFF	1	1	1	1	Restart Address (LSB)
		3	Jump Address	1	0	1	0	First Op Code of Jump Routine
ADC ADD AND BIT CMP EOR LDA ORA SBC SUB TST	4	1	Op Code Address+1	1	0	1	1	Offset
		2	FFFF	1	1	1	1	Restart Address (LSB)
		3	IX+Offset	1	0	1	1	Operand Data
		4	Op Code Address+2	1	0	1	0	Next Op Code
STA	4	1	Op Code Address+1	1	0	1	1	Offset
		2	FFFF	1	1	1	1	Restart Address (LSB)
		3	IX+Offset	0	1	0	1	Accumulator Data
		4	Op Code Address+2	1	0	1	0	Next Op Code
ADDD CPX LDD LDS LDX SUBD ADD	5	1	Op Code Address+1	1	0	1	1	Offset
		2	FFFF	1	1	1	1	Restart Address (LSB)
		3	IX+Offset	1	0	1	1	Operand Data (MSB)
		4	IX+Offset+1	1	0	1	1	Operand Data (LSB)
		5	Op Code Address+2	1	0	1	0	Next Op Code
STD STS STX	5	1	Op Code Address+1	1	0	1	1	Offset
		2	FFFF	1	1	1	1	Restart Address (LSB)
		3	IX+Offset	0	1	0	1	Register Data (MSB)
		4	IX+Offset+1	0	1	0	1	Register Data (LSB)
		5	Op Code Address+2	1	0	1	0	Next Op Code
JSR	5	1	Op Code Address+1	1	0	1	1	Offset
		2	FFFF	1	1	1	1	Restart Address (LSB)
		3	Stack Pointer	0	1	0	1	Return Address (LSB)
		4	Stack Pointer—1	0	1	0	1	Return Address (MSB)
		5	IX+Offset	1	0	1	0	First Subroutine Op Code
ASL ASR COM DEC INC LSR NEG ROL ROR	6	1	Op Code Address+1	1	0	1	1	Offset
		2	FFFF	1	1	1	1	Restart Address (LSB)
		3	IX+Offset	1	0	1	1	Operand Data
		4	FFFF	1	1	1	1	Restart Address (LSB)
		5	IX+Offset	0	1	0	1	New Operand Data
		6	Op Code Address+2	1	0	1	0	Next Op Code
TIM	5	1	Op Code Address+1	1	0	1	1	Immediate Data
		2	Op Code Address+2	1	0	1	1	Offset
		3	FFFF	1	1	1	1	Restart Address (LSB)
		4	IX+Offset	1	0	1	1	Operand Data
		5	Op Code Address+3	1	0	1	0	Next Op Code
CLR	5	1	Op Code Address+1	1	0	1	1	Offset
		2	FFFF	1	1	1	1	Restart Address (LSB)
		3	IX+Offset	1	0	1	1	Operand Data
		4	IX+Offset	0	1	0	1	00
		5	Op Code Address+2	1	0	1	0	Next Op Code
AIM EIM OIM	7	1	Op Code Address+1	1	0	1	1	Immediate Data
		2	Op Code Address+2	1	0	1	1	Offset
		3	FFFF	1	1	1	1	Restart Address (LSB)
		4	IX+Offset	1	0	1	1	Operand Data
		5	FFFF	1	1	1	1	Restart Address (LSB)
		6	IX+Offset	0	1	0	1	New Operand Data
		7	Op Code Address+3	1	0	1	0	Next Op Code

(continued)

Table 22. Cycle-by-Cycle Operation (Cont)

Address Mode & Instructions	Cycles	Cycle #	Address Bus	R/$\overline{W}$	$\overline{RD}$	$\overline{WR}$	$\overline{LIR}$	Data Bus
EXTEND								
JMP	3	1	Op Code Address+1	1	0	1	1	Jump Address (MSB)
		2	Op Code Address+2	1	0	1	1	Jump Address (LSB)
		3	Jump Address	1	0	1	0	Next Op Code
ADC ADD TST AND BIT CMP EOR LDA ORA SBC SUB	4	1	Op Code Address+1	1	0	1	1	Address of Operand (MSB)
		2	Op Code Address+2	1	0	1	1	Address of Operand (LSB)
		3	Address of Operand	1	0	1	1	Operand Data
		4	Op Code Address+3	1	0	1	0	Next Op Code
STA	4	1	Op Code Address+1	1	0	1	1	Destination Address (MSB)
		2	Op Code Address+2	1	0	1	1	Destination Address (LSB)
		3	Destination Address	0	1	0	1	Accumulator Data
		4	Op Code Address+3	1	0	1	0	Next Op Code
ADDD CPX LDD LDS LDX SUBD	5	1	Op Code Address+1	1	0	1	1	Address of Operand (MSB)
		2	Op Code Address+2	1	0	1	1	Address of Operand (LSB)
		3	Address of Operand	1	0	1	1	Operand Data (MSB)
		4	Address of Operand+1	1	0	1	1	Operand Data (LSB)
		5	Op Code Address+3	1	0	1	0	Next Op Code
STD STS STX	5	1	Op Code Address+1	1	0	1	1	Destination Address (MSB)
		2	Op Code Address+2	1	0	1	1	Destination Address (LSB)
		3	Destination Address	0	1	0	1	Register Data (MSB)
		4	Destination Address+1	0	1	0	1	Register Data (LSB)
		5	Op Code Address+3	1	0	1	0	Next Op Code
JSR	6	1	Op Code Address+1	1	0	1	1	Jump Address (MSB)
		2	Op Code Address+2	1	0	1	1	Jump Address (LSB)
		3	FFFF	1	1	1	1	Restart Address (LSB)
		4	Stack Pointer	0	1	0	1	Return Address (LSB)
		5	Stack Pointer−1	0	1	0	1	Return Address (MSB)
		6	Jump Address	1	0	1	0	First Subroutine Op Code
ASL ASR COM DEC INC LSR NEG ROL ROR	6	1	Op Code Address+1	1	0	1	1	Address of Operand (MSB)
		2	Op Code Address+2	1	0	1	1	Address of Operand (LSB)
		3	Address of Operand	1	0	1	1	Operand Data
		4	FFFF	1	1	1	1	Restart Address (LSB)
		5	Address of Operand	0	1	0	1	New Operand Data
		6	Op Code Address+3	1	0	1	0	Next Op Code
CLR	5	1	Op Code Address+1	1	0	1	1	Address of Operand (MSB)
		2	Op Code Address+2	1	0	1	1	Address of Operand (LSB)
		3	Address of Operand	1	0	1	1	Operand Data
		4	Address of Operand	0	1	0	1	00
		5	Op Code Address+3	1	0	1	0	Next Op Code

(continued)

Table 22. Cycle-by-Cycle Operation (Cont)

Address Mode & Instructions	Cycles	Cycle #	Address Bus	R/$\overline{W}$	$\overline{RD}$	$\overline{WR}$	$\overline{LIR}$	Data Bus
IMPLIED								
ABA ABX ASL ASLD ASR CBA CLC CLI CLR CLV COM DEC DES DEX INC INS INX LSR LSRD ROL ROR NOP SBA SEC SEI SEV TAB TAP TBA TPA TST TSX TXS	1	1	Op Code Address+1	1	0	1	0	Next Op Code
DAA XGDX	2	1	Op Code Address+1	1	0	1	0	Next Op Code
		2	FFFF	1	1	1	1	Restart Address (LSB)
PULA PULB	3	1	Op Code Address+1	1	0	1	0	Next Op Code
		2	FFFF	1	1	1	1	Restart Address (LSB)
		3	Stack Pointer+1	1	0	1	1	Data from Stack
PSHA PSHB	4	1	Op Code Address+1	1	0	1	1	Next Op Code
		2	FFFF	1	1	1	1	Restart Address (LSB)
		3	Stack Pointer	0	1	0	1	Accumulator Data
		4	Op Code Address+1	1	0	1	0	Next Op Code
PULX	4	1	Op Code Address+1	1	0	1	0	Next Op Code
		2	FFFF	1	1	1	1	Restart Address (LSB)
		3	Stack Pointer+1	1	0	1	1	Data from Stack (MSB)
		4	Stack Pointer+2	1	0	1	1	Data from Stack (LSB)
PSHX	5	1	Op Code Address+1	1	0	1	1	Next Op Code
		2	FFFF	1	1	1	1	Restart Address (LSB)
		3	Stack Pointer	0	1	0	1	Index Register (LSB)
		4	Stack Pointer−1	0	1	0	1	Index Register (MSB)
		5	Op Code Address+1	1	0	1	0	Next Op Code
RTS	5	1	Op Code Address+1	1	0	1	1	Next Op Code
		2	FFFF	1	1	1	1	Restart Address (LSB)
		3	Stack Pointer+1	1	0	1	1	Return Address (MSB)
		4	Stack Pointer+2	1	0	1	1	Return Address (LSB)
		5	Return Address	1	0	1	0	First Op Code of Return Routine
MUL	7	1	Op Code Address+1	1	0	1	0	Next Op Code
		2	FFFF	1	1	1	1	Restart Address (LSB)
		3	FFFF	1	1	1	1	Restart Address (LSB)
		4	FFFF	1	1	1	1	Restart Address (LSB)
		5	FFFF	1	1	1	1	Restart Address (LSB)
		6	FFFF	1	1	1	1	Restart Address (LSB)
		7	FFFF	1	1	1	1	Restart Address (LSB)

(continued)

Table 22. Cycle-by-Cycle Operation (Cont)

Address Mode & Instructions	Cycles	Cycle #	Address Bus	R/$\overline{W}$	$\overline{RD}$	$\overline{WR}$	$\overline{LIR}$	Data Bus
IMPLIED								
WAI	9	1	Op Code Address+1	1	0	1	1	Next Op Code
		2	FFFF	1	1	1	1	Restart Address (LSB)
		3	Stack Pointer	0	1	0	1	Return Address (LSB)
		4	Stack Pointer−1	0	1	0	1	Return Address (MSB)
		5	Stack Pointer−2	0	1	0	1	Index Register (LSB)
		6	Stack Pointer−3	0	1	0	1	Index Register (MSB)
		7	Stack Pointer−4	0	1	0	1	Accumulator A
		8	Stack Pointer−5	0	1	0	1	Accumulator B
		9	Stack Pointer−6	0	1	0	1	Conditional Code Register
RTI	10	1	Op Code Address+1	1	0	1	1	Next Op Code
		2	FFFF	1	1	1	1	Restart Address (LSB)
		3	Stack Pointer+1	1	0	1	1	Conditional Code Register
		4	Stack Pointer+2	1	0	1	1	Accumulator A
		5	Stack Pointer+3	1	0	1	1	Accumulator B
		6	Stack Pointer+4	1	0	1	1	Index Register (MSB)
		7	Stack Pointer+5	1	0	1	1	Index Register (LSB)
		8	Stack Pointer+6	1	0	1	1	Return Address (MSB)
		9	Stack Pointer+7	1	0	1	1	Return Address (LSB)
		10	Return Address	1	0	1	0	First Op Code of Return Routine
SWI	12	1	Op Code Address+1	1	0	1	1	Next Op Code
		2	FFFF	1	1	1	1	Restart Address (LSB)
		3	Stack Pointer	0	1	0	1	Return Address (LSB)
		4	Stack Pointer−1	0	1	0	1	Return Address (MSB)
		5	Stack Pointer−2	0	1	0	1	Index Register (LSB)
		6	Stack Pointer−3	0	1	0	1	Index Register (MSB)
		7	Stack Pointer−4	0	1	0	1	Accumulator A
		8	Stack Pointer−5	0	1	0	1	Accumulator B
		9	Stack Pointer−6	0	1	0	1	Conditional Code Register
		10	Vector Address FFFA	1	0	1	1	Address of SWI Routine (MSB)
		11	Vector Address FFFB	1	0	1	1	Address of SWI Routine (LSB)
		12	Address of SWI Routine	1	0	1	0	First Op Code of SWI Routine
SLP	4	1	Op Code Address+1	1	0	1	1	Next Op Code
		2	FFFF	1	1	1	1	Restart Address (LSB)
		↑ Sleep ↓		↓	↓	↓	↓	↓
		3	FFFF	1	1	1	1	Restart Address (LSB)
		4	Op Code Address+1	1	0	1	0	Next Op Code

(continued)

Table 22. Cycle-by-Cycle Operation (Cont)

Address Mode & Instructions	Cycles	Cycle #	Address Bus	R/$\overline{W}$	$\overline{RD}$	$\overline{WR}$	$\overline{LIR}$	Data Bus
RELATIVE								
BCC BCS BEQ BGE BGT BHI BLE BLS BLT BMT BNE BPL BRA BRN BVC BVS	3	1	Op Code Address+1	1	0	1	1	Branch Offset
		2	FFFF	1	1	1	1	Restart Address (LSB)
		3	{ Branch Address···Test="1" { Op Code Address+2···Test="0"	1	0	1	0	First Op Code of Branch Routine Next Op Code
BSR	5	1	Op Code Address+1	1	0	1	1	Offset
		2	FFFF	1	1	1	1	Restart Address (LSB)
		3	Stack Pointer	0	1	0	1	Return Address (LSB)
		4	Stack Pointer−1	0	1	0	1	Return Address (MSB)
		5	Branch Address	1	0	1	0	First Op Code of Subroutine

The Differences Between HD63701Y0 and HD6301Y0

Item	HD63701Y0	HD6301Y0
Input low voltage of $\overline{RES}$, MP_0, MP_1	V_{IL} = 0.6 V max	V_{IL} = 0.8 V max
I_{in} and C_{in} of $\overline{RES}$	I_{in} = 10 μA max C_{in} = 65 pF max I_{in} and C_{in} are larger than HD6301Y0 because $\overline{RES}$ is also used as V_{PP}.	I_{in} = 1.0 μA max C_{in} = 12.5 pF max
Crystal oscillator characteristics	Internal resistance of crystal oscillator R_S Frequency (MHz): 2.5, 4.0, 6.0, 8.0 R_S max (Ω): 500, 120, 80, 60	Internal resistance of crystal oscillator R_S R_S = 60 Ω max
Storage temperature	T_{stg} = −55 to 125 °C	T_{stg} = −55 to 150 °C
Caution	The HD63701Y0 differs from HD6301Y0 in chip design and manufacturing process. When applying the HD63701Y0 system to HD6301Y0, and HD6301Y0 system to HD63701Y0, note that characteristic values are not exactly the same even if guaranteed values are the same.	

Absolute Maximum Ratings

Item	Symbol	Value	Unit
Supply voltage	V_{CC}	−0.3 to +7.0	V
V_{PP} voltage	V_{PP}	−0.3 to +13.0	V
Input voltage	V_{in}	−0.3 to V_{CC}+0.3	V
Operating temperature	T_{opr}	0 to +70	°C
Storage temperature	T_{stg}	−55 to +125	°C

Note: This product has protection circuits in input terminal from high static electricity voltage and high electric field.
But be careful not to apply overvoltage more than maximum ratings to these high input impedance protection circuits. To assure the normal operation, we recommend V_{in}, V_{out}: $V_{SS} \leq (V_{in}$ or $V_{out}) \leq V_{CC}$.

Electrical Characteristics

DC Characteristics

(V_{CC}=5.0 V ± 10%, f=0.1 to 2.0 MHz, V_{SS}=0 V, Ta=0 to +70 °C, unless otherwise noted.)

Item		Symbol	Min	Typ	Max	Unit	Test Condition
Input high voltage	$\overline{RES}$, $\overline{STBY}$, MP_0, MP_1	V_{IH}	V_{CC}−0.5		V_{CC}+0.3	V	
	EXTAL		V_{CC}×0.7		V_{CC}+0.3	V	
	Other inputs		2.0		V_{CC}+0.3	V	
Input low voltage	$\overline{RES}$, MP_0, MP_1, SCLK($P2_2$)[3]	V_{IL}	−0.3		0.6	V	
	All other inputs		−0.3		0.8	V	
Input leakage current	$\overline{RES}$	$\|I_{in}\|$			10.0	μA	V_{in}=0.5 to V_{CC}−0.5 V
	$\overline{NMI}$, $\overline{STBY}$, MP_0, MP_1				1.0	μA	
Three state leakage current	Ports 1, 2, 3, 4, 5, 6, 7	$\|I_{TSI}\|$			1.0	μA	V_{in}=0.5 to V_{CC}−0.5 V
Output high voltage		V_{OH}	2.4			V	i_{OH}=−200 μA
			V_{CC}−0.7			V	I_{OH}=−10 μA
Output low voltage		V_{OL}			0.4	V	I_{OL}=1.6 mA
Darlington drive current	Ports 2, 6	$-I_{OH}$	1.0		10.0	mA	V_{out}=1.5 V
Input capacitance	$\overline{RES}$	C_{in}			65	pF	V_{in}=0 V, f=1 MHz,
	All other inputs				12.5	pF	Ta=25°C
Standby current	Not operating	I_{STB}		3.0	15.0	μA	
Current dissipation[1]		I_{SLP}		1.5	3.0	mA	Sleeping (f=1 MHz[2])
				2.3	4.5	mA	Sleeping (f=1.5 MHz[2])
				3.0	6.0	mA	Sleeping (f=2 MHz[2])
		I_{CC}		7.0	10.0	mA	Operating (f=1 MHz[2])
				10.5	15.0	mA	Operating (f=1.5 MHz[2])
				14.0	20.0	mA	Operating (f=2 MHz[2])
RAM standby voltage		V_{RAM}	2.0			V	

Notes:
1. V_{IH} min=V_{CC}−1.0V, V_{IL} max=0.8V (All output terminals are at no load.)
2. Current dissipation of the operating or sleeping condition is proportional to the operating frequency. So the typ. or max. values about current dissipations at *x* MHz operation are decided according to the following formula:
   typ. value (f=*x* MHz) =typ. value (f=1 MHz)×*x*
   max. value (f=*x* MHz) =max. value (f=1 MHz)×*x*
   (both the sleeping and operating)
3. Only serial clock use.

AC Characteristics

(V_{CC}=5.0 V ±10 %, f=0.1 to 2.0 MHz, V_{SS}=0 V, Ta=0 to +70 °C, unless otherwise noted.)

Bus Timing

Item		Symbol	HD63701Y0 Min	HD63701Y0 Typ	HD63701Y0 Max	HD637A01Y0 Min	HD637A01Y0 Typ	HD637A01Y0 Max	HD637B01Y0 Min	HD637B01Y0 Typ	HD637B01Y0 Max	Unit	Test Condition
Cycle time		t_{cyc}	1		10	0.666		10	0.5		10	μs	Fig. 40
Enable rise time		t_{Er}			25			25			25	ns	
Enable fall time		t_{Ef}			25			25			25	ns	
Enable pulse width high level[1]		PW_{EH}	450			300			220			ns	
Enable pulse width low level[1]		PW_{EL}	450			300			220			ns	
Address, R/$\overline{W}$ delay time[1]		t_{AD}			250			190			160	ns	
Data delay time	(Write)	t_{DDW}			200			160			120	ns	
Data set-up time	(Read)	t_{DSR}	80			70			60			ns	
Address, R/$\overline{W}$ hold time[1]		t_{AH}	80			50			40			ns	
Data hold time	(Write)[1]	t_{HW}	80			50			40			ns	
	(Read)	t_{HR}	0			0			0			ns	
$\overline{RD}$, $\overline{WR}$ pulse width[1]		PW_{RW}	450			300			220			ns	
$\overline{RD}$, $\overline{WR}$ delay time		t_{RWD}			40			40			40	ns	
$\overline{RD}$, $\overline{WR}$ hold time		t_{HRW}			20			20			20	ns	
$\overline{LIR}$ delay time		t_{DLR}			200			160			120	ns	
$\overline{LIR}$ hold time		t_{HLR}	10			10			10			ns	
MR set-up time[1]		t_{SMR}	400			280			230			ns	Fig. 41
MR hold time[1]		t_{HMR}			100			70			50	ns	
E clock pulse width at MR		PW_{EMR}			9			9			9	μs	
Processor control set-up time		t_{PCS}	200			200			200			ns	Figs. 42, 52, 53
Processor control rise time		t_{PCr}			100			100			100	ns	Figs. 41, 42
Processor control fall time		t_{PCf}			100			100			100	ns	
BA delay time		t_{BA}			250			190			160	ns	Fig. 42
Oscillator stabilization time		t_{RC}	20			20			20			ms	Fig. 53
Reset pulse width		PW_{RST}	3			3			3			t_{cyc}	

Note: 1. These timings change in approximate proportion to t_{cyc}. The figures in this characteristics represent those when t_{cyc} is minimum (=in the highest speed operation).

Peripheral Port Timing

Item		Symbol	HD63701Y0 Min	HD63701Y0 Typ	HD63701Y0 Max	HD637A01Y0 Min	HD637A01Y0 Typ	HD637A01Y0 Max	HD637B01Y0 Min	HD637B01Y0 Typ	HD637B01Y0 Max	Unit	Test Condition
Peripheral data set-up time	(Ports 1, 2, 3 4, 5, 6)	t_{PDSU}	200			200			200			ns	Fig. 44
Peripheral data hold time	(Ports 1, 2, 3 4, 5, 6)	t_{PDH}	200			200			200			ns	
Delay time (From enable fall edge to peripheral output)	(Ports 1, 2, 3 4, 5, 6, 7)	t_{PWD}			300			300			300	ns	Fig. 45
Input strobe pulse width		t_{PWIS}	200			200			200			ns	Fig. 49
Input data hold time	(Port 6)	t_{IH}	150			150			150			ns	
Input data set-up time	(Port 6)	t_{IS}	100			100			100			ns	
Output strobe delay time		t_{OSD1}			200			200			200	ns	Fig. 50
		t_{OSD2}											

Timer, SCI Timing

Item		Symbol	HD63701Y0 Min	HD63701Y0 Typ	HD63701Y0 Max	HD637A01Y0 Min	HD637A01Y0 Typ	HD637A01Y0 Max	HD637B01Y0 Min	HD637B01Y0 Typ	HD637B01Y0 Max	Unit	Test Condition
Timer 1 input pulse width		t_{PWT}	2.0			2.0			2.0			t_{cyc}	Fig. 48
Delay time (enable positive transition to timer output)		t_{TOD}			400			400			400	ns	Figs. 46, 47
SCI input clock cycle	(Async. mode)	t_{Scyc}	1.0			1.0			1.0			t_{cyc}	Fig. 48
	(Clock sync.)		2.0			2.0			2.0			t_{cyc}	Fig. 43
SCI transmit data delay time (Clock sync. mode)		t_{TXD}			220			220			220	ns	Fig. 43
SCI receive data set-up time (Clock sync. mode)		t_{SRX}	260			260			260			ns	
SCI receive data hold time (Clock sync. mode)		t_{HRX}	100			100			100			ns	
SCI input clock pulse width		t_{PWSCK}	0.4		0.6	0.4		0.6	0.4		0.6	t_{Scyc}	Fig. 48
Timer 2 input clock cycle		t_{tcyc}	2.0			2.0			2.0			t_{cyc}	
Timer 2 input clock pulse width		t_{PWTCK}	200			200			200			ns	
Timer 1 • 2, SCI input clock rise time		t_{CKr}			100			100			100	ns	
Timer 1 • 2, SCI input clock fall time		t_{CKf}			100			100			100	ns	

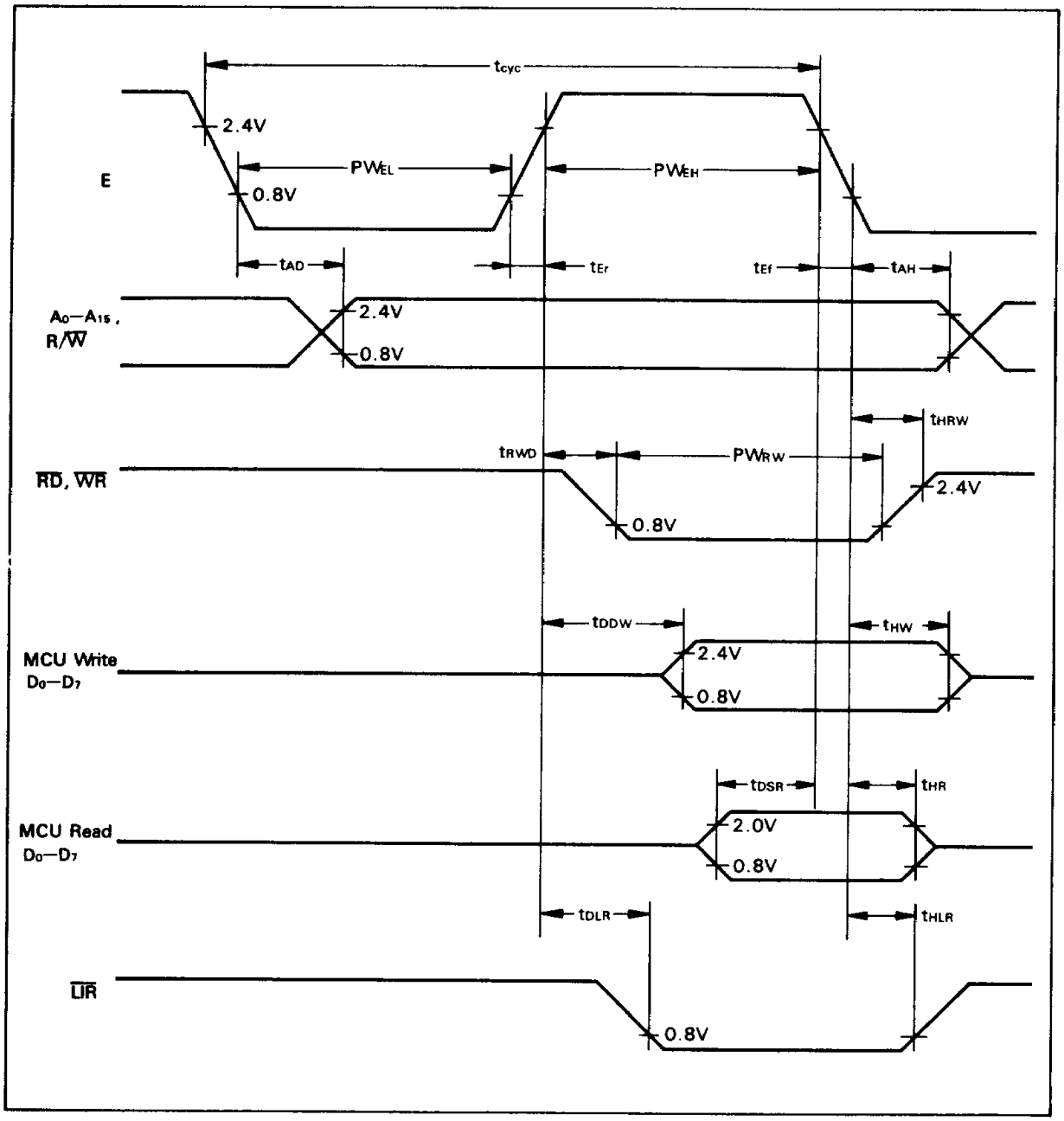

Figure 40. Mode 1, Mode 2 Bus Timing

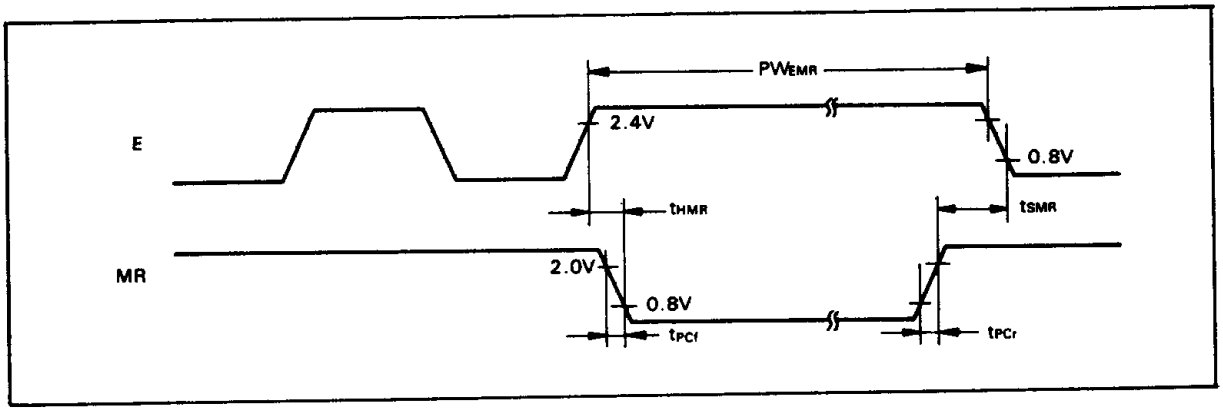

Figure 41. Memory Ready and E Clock Timing

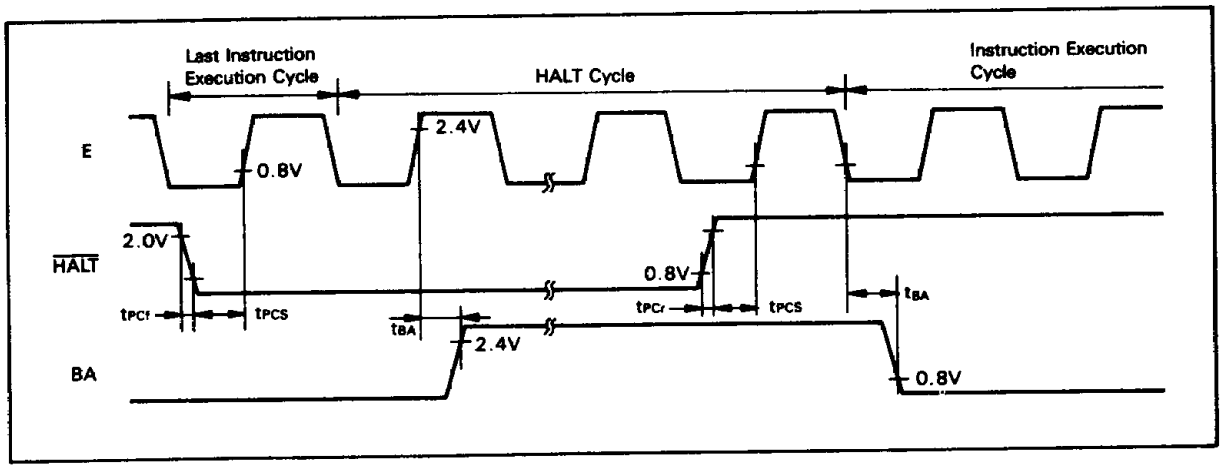

Figure 42. $\overline{\text{HALT}}$ and BA Timing

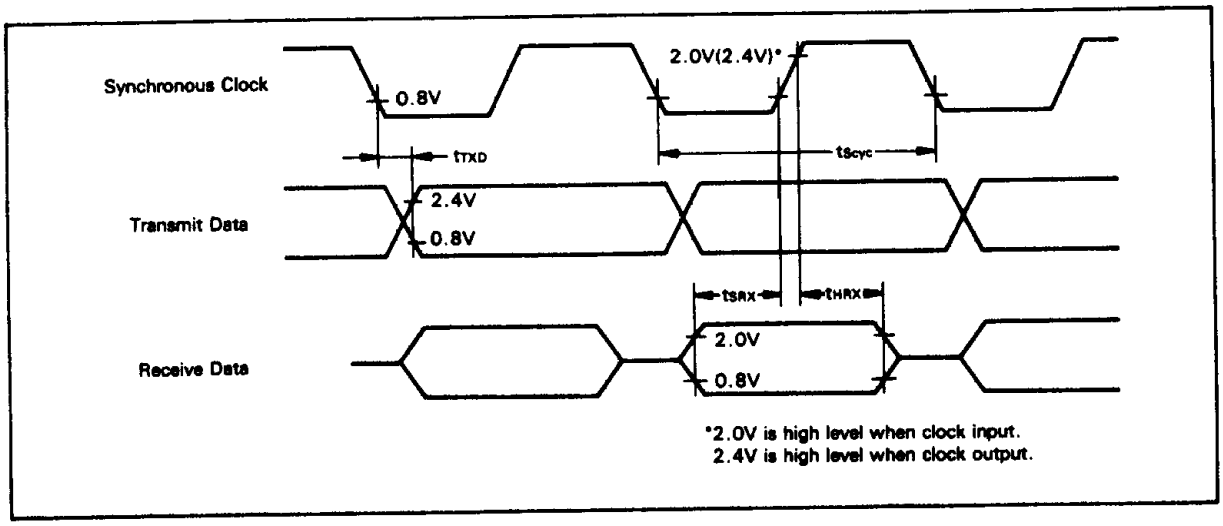

Figure 43. SCI Clocked Synchronous Timing

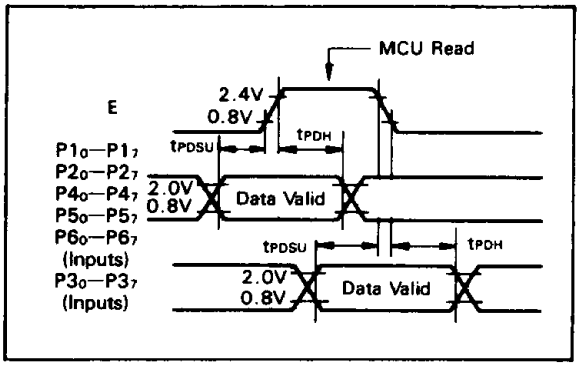

Figure 44. Port Data Set-up and Hold Times (MCU Read)

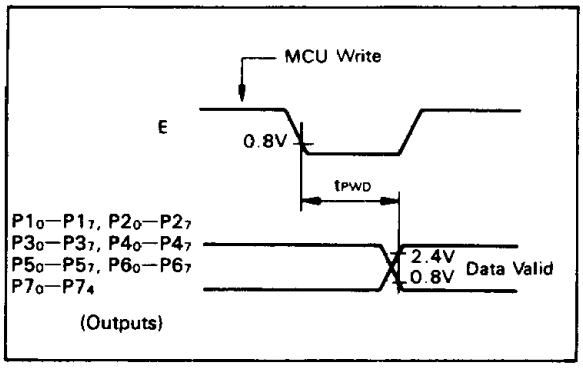

Figure 45. Port Data Delay Times (MCU Write)

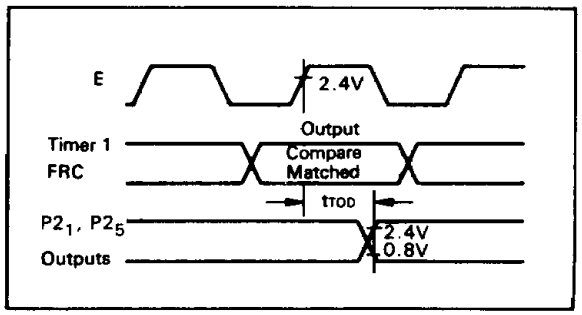

Figure 46. Timer 1 Output Timing

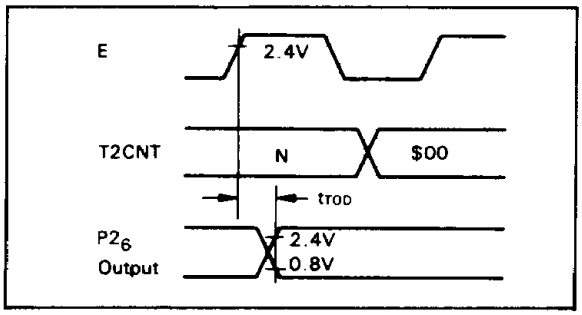

Figure 47. Timer 2 Output Timing

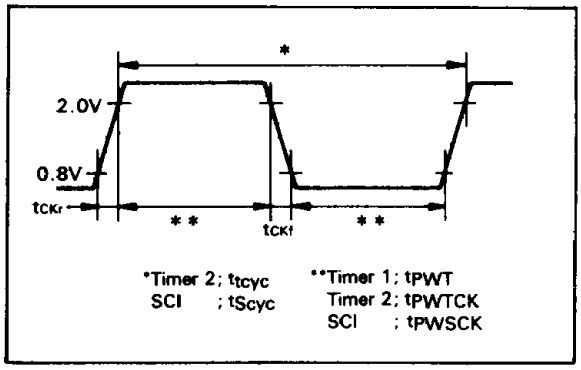

Figure 48. Timer 1 · 2, SCI Input Clock Timing

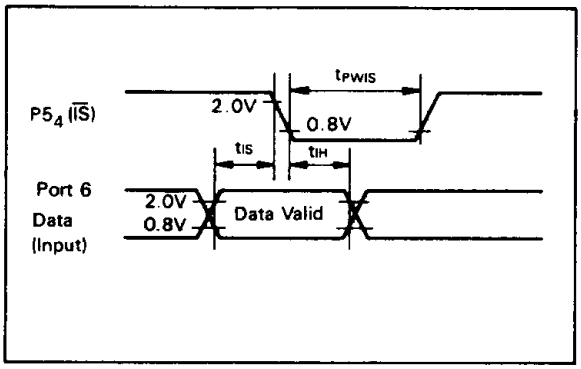

Figure 49. Port 6 Input Latch Timing

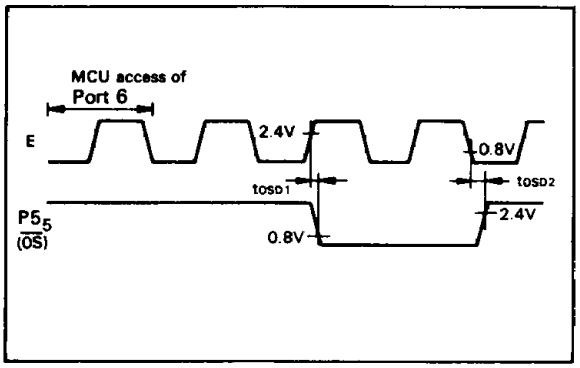

Figure 50. Output Strobe Timing

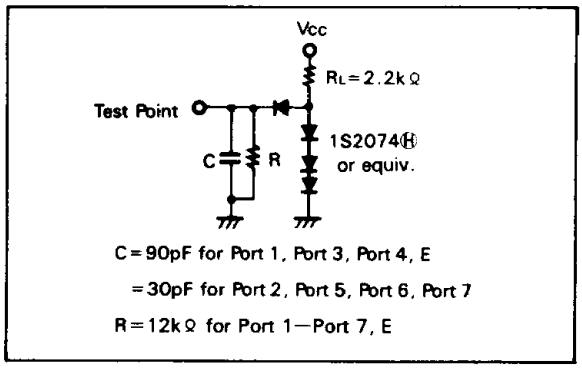

Figure 51. Bus Timing Test Loads (TTL Load)

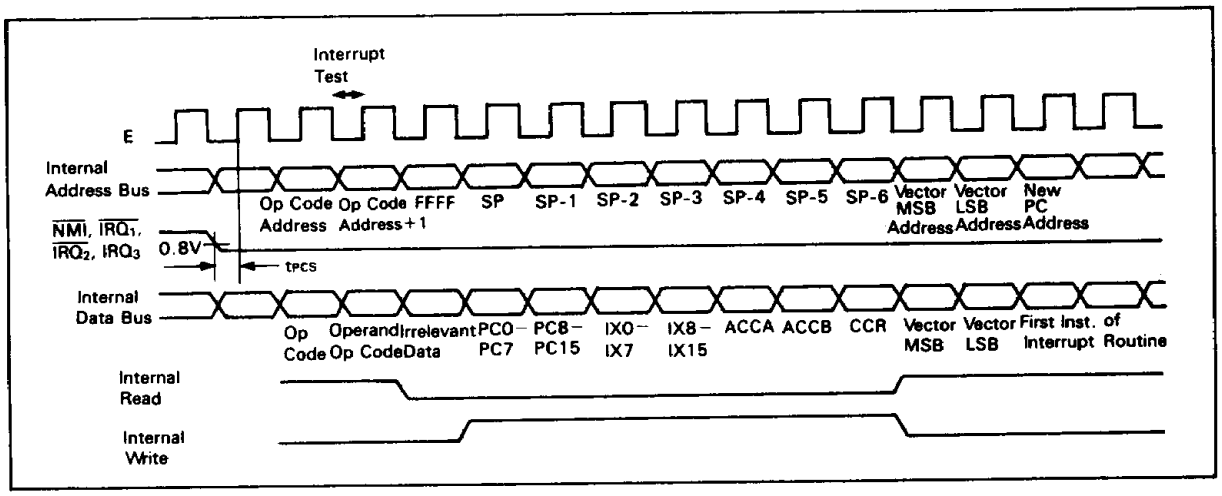

Figure 52. Interrupt Sequence

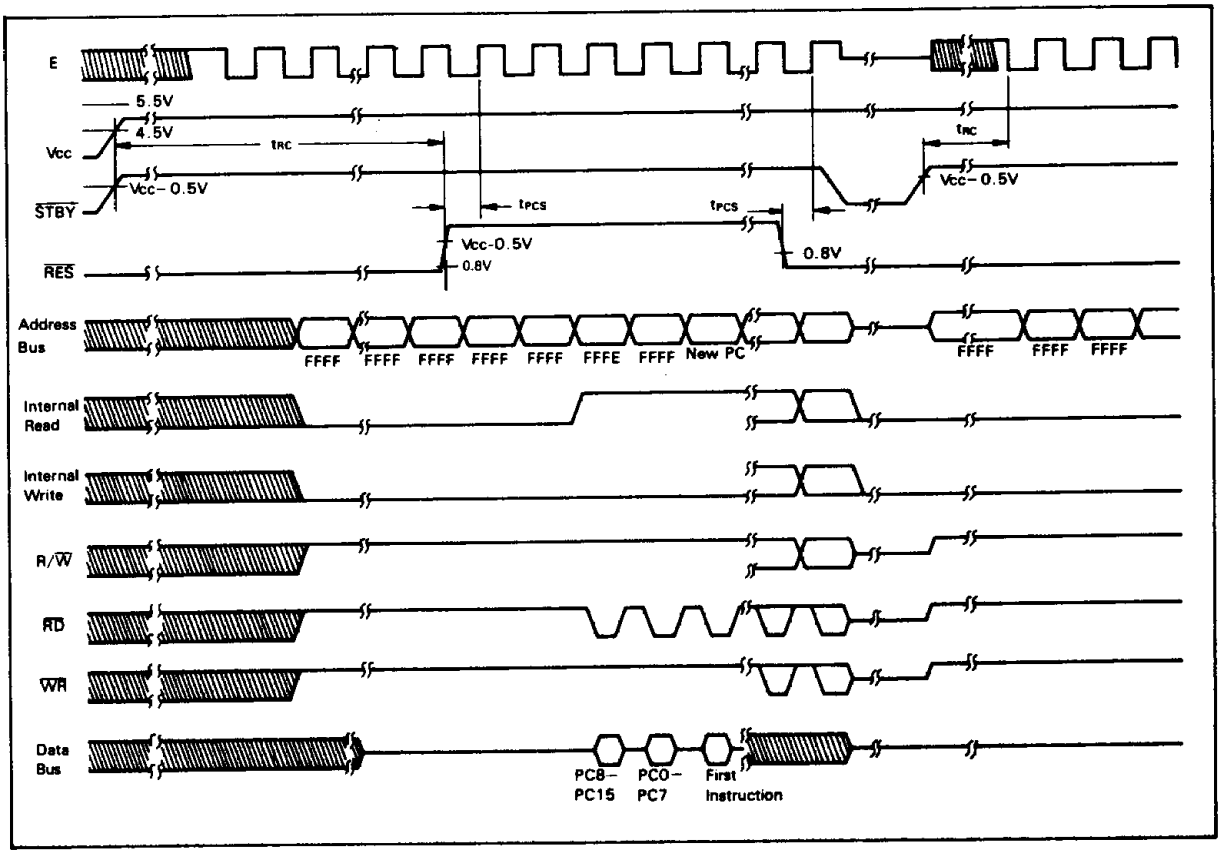

Figure 53. Reset Timing

Programming Electrical Characteristics

DC Characteristics

(V_{CC}=6 V ± 0.25 V, V_{PP}=12.5 V ± 0.3 V, V_{SS}=0 V, Ta=25 °C ± 5 °C, unless otherwise notes.)

Item		Symbol	Min	Typ	Max	Unit	Test Condition
Input high voltage	O_0—O_7, A_0—A_{14}, $\overline{OE}$, $\overline{CE}$	V_{IH}	2.2	—	V_{CC}+0.3	V	
Input low voltage	O_0—O_7, A_0—A_{14}, $\overline{OE}$, $\overline{CE}$	V_{IL}	−0.3	—	0.8	V	
Output high voltage	O_0—O_7	V_{OH}	2.4	—	—	V	I_{OH}=−200μA
Output low voltage	O_0—O_7	V_{OL}	—	—	0.45	V	I_{OL}=1.6mA
Input leakage current	O_0—O_7, A_0—A_{14}, $\overline{OE}$, $\overline{CE}$	$\|I_{LI}\|$	—	—	2	μA	V_{in}=5.25V/0.5V
V_{CC} current		I_{CC}	—	—	30	mA	
V_{PP} current		I_{PP}	—	—	40	mA	

AC Characteristics

(V_{CC}=6 V ± 0.25 V, V_{PP}=12.5 V ± 0.3 V, Ta=25 °C ± 5 °C, unless otherwise noted.)

Item	Symbol	Min	Typ	Max	Unit	Test Condition
Address set-up time	t_{AS}	2	—	—	μs	Fig. 54*
$\overline{OE}$ set-up time	t_{OES}	2	—	—	μs	
Data set-up time	t_{DS}	2	—	—	μs	
Address hold time	t_{AH}	0	—	—	μs	
Data hold time	t_{DH}	2	—	—	μs	
Output disable delay time	t_{DF}	—	—	130	ns	
V_{PP} set-up time	t_{VPS}	2	—	—	μs	
Program pulse width	t_{PW}	0.95	1.0	1.05	ms	
$\overline{CE}$ pulse width when overprogramming	t_{OPW}	2.85	—	78.75	ms	
V_{CC} set-up time	t_{VCS}	2	—	—	μs	
Data output delay time	t_{OE}	0	—	500	ns	

Note: * Input Pulse level 0.8~2.2V
Input rising/falling time≦20ns
Timing reference level { input : 1.0V, 2.0V
output : 0.8V, 2.0V

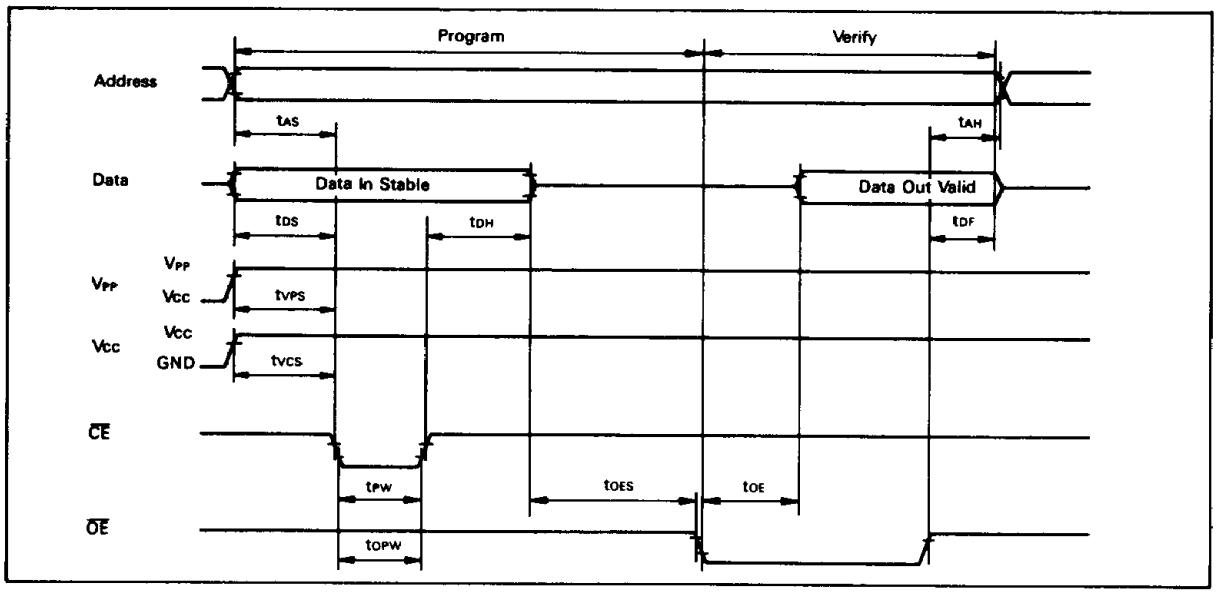

Figure 54. EPROM Programming/Verify timing

Warning Concerning the Board of Oscillation Circuit

When designing a board, note that crosstalk may disturb the normal oscillation if signal lines are placed near the oscillation circuit as shown in Figure 55. Place the crystal and C_L as close to the HD63701Y0 as possible.

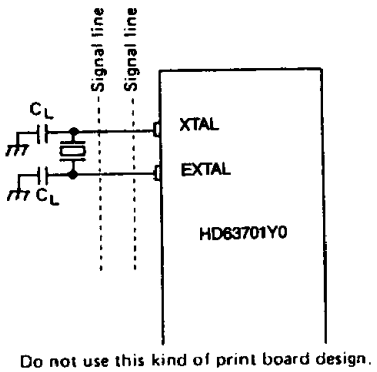

Figure 55 Warning concerning board design of oscillation circuit

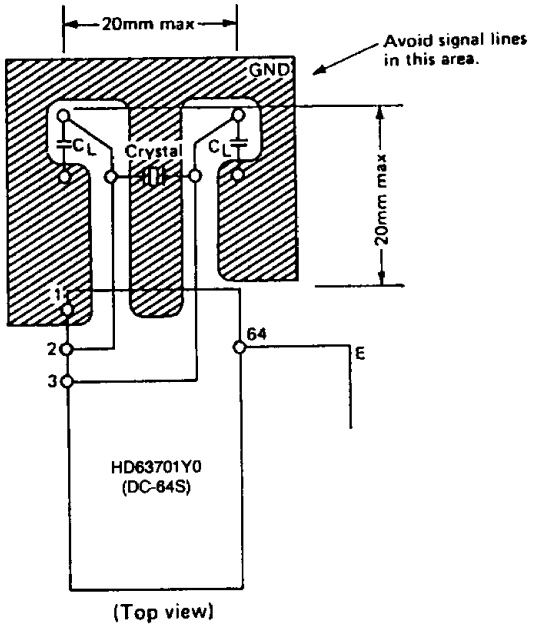

Figure 56 Example of Oscillation Circuits in Board Design

Receive Margin of the SCI

Receive margin of the SCI contained in the HD63701Y0 is shown in Table 22.
Note: SCI = Serial Communication Interface.

Table 23

Bit distortion tolerance (t–to) /to	Character distortion tolerance (T–To) /To
±43.7%	±4.37%

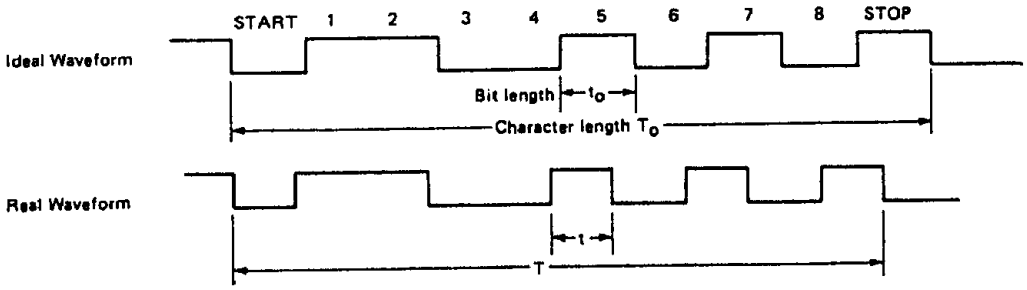

Warning Concerning WAI Instruction

If the HALT signal is accepted by the MCU while the WAI instruction is executing, the CPU will not operate correctly after HALT mode is canceled.

WAI is a instruction which waits for an interrupt. The corresponding interrupt routine is executed after an interrupt occurs.

However, during the execution of the WAI instruction, $\overline{\text{HALT}}$ input makes the CPU malfunction and fetch an abnormal interrupt vectoring address.

In HALT mode, the CPU operates correctly without the WAI instruction and WAI is executed correctly without $\overline{\text{HALT}}$ input. Therefore, if $\overline{\text{HALT}}$ input is necessary, make interrupts wait during the loop routine, as shown in Figure 57.

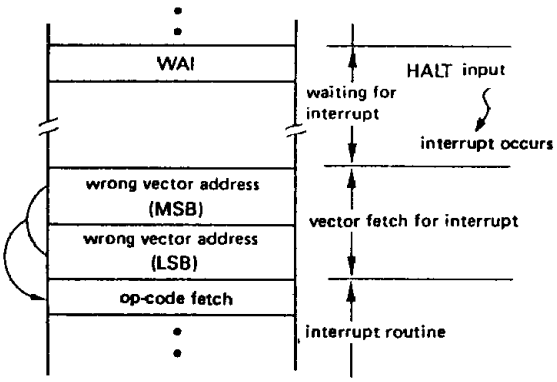

Figure 57 MAC function during WAI

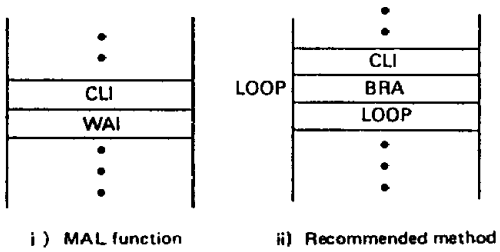

Figure 58 Program to wait for interrupt

Write-Only Register

When the CPU reads a write-only register, the read data is always $FF, regardless of the value in the write-only register. Therefore, be careful of the results of instructions which read write-only register and perform an arithmetic or logical operation on its contents, such as AIM, ADD, or ROL, is executed, because the arithmetic or logical operation is always done with the data $FF. In particulars, don't use the AIM, OIM or EIM instruction to manipulate the DDR bit of PORT.

Warning Concerning Power Start-Up

$\overline{\text{RES}}$ must be held low for at least 20 ms when the power starts up. In this case, the internal reset function is not effective until the oscillation begins at power-on. The $\overline{\text{RES}}$ signal is input to the LSI in synchronism with the internal clock ϕ (shown in Figure 59.)

Therefore, after power starts up, the LSI conditions such as its I/O ports and operating mode, are unstable. Fix the level of I/O ports by means of an external circuit to determine the level for system operation during the oscillation stabilization time.

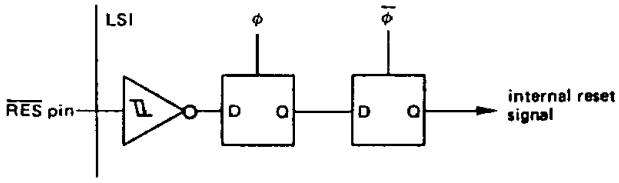

Figure 59 $\overline{\text{RES}}$ circuit