Home cinema SONY hcd-dz20. The power supply when whipping 220v starts to whistle (transformer). On the power foot of the STR-F6168, the voltage drops from 21v to 10v. Soldered mikruhu-21v. I connected only the power foot and the ground, also 10v. Capacity changed. Number according to the ic901 scheme.

The voltage on the emitter and base q901 is normal according to the scheme (20v). On ic921, the supply voltage is 21v as according to the scheme. What to replace or what to remake?

upd: I found the full analog of strf6264, but not in the city, on the chip dip too.

A piece of circuit with a microcircuit added. Also added the entire service.

Thanks in advance.

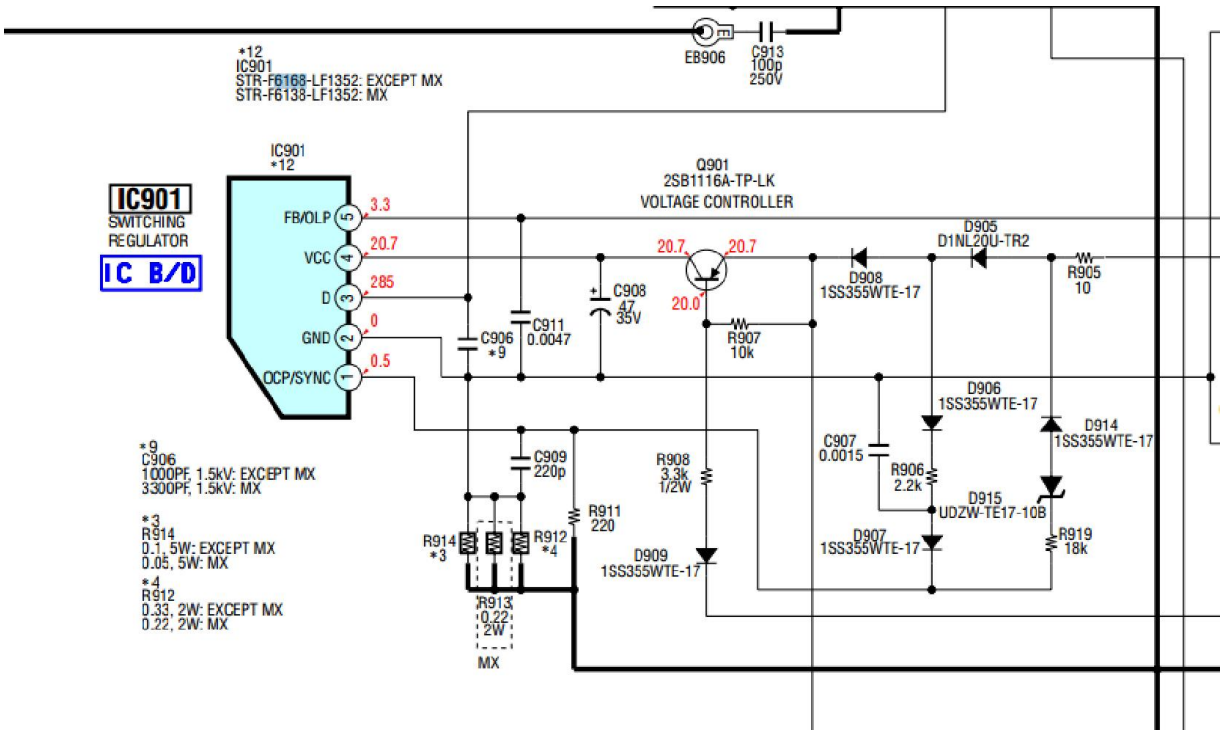

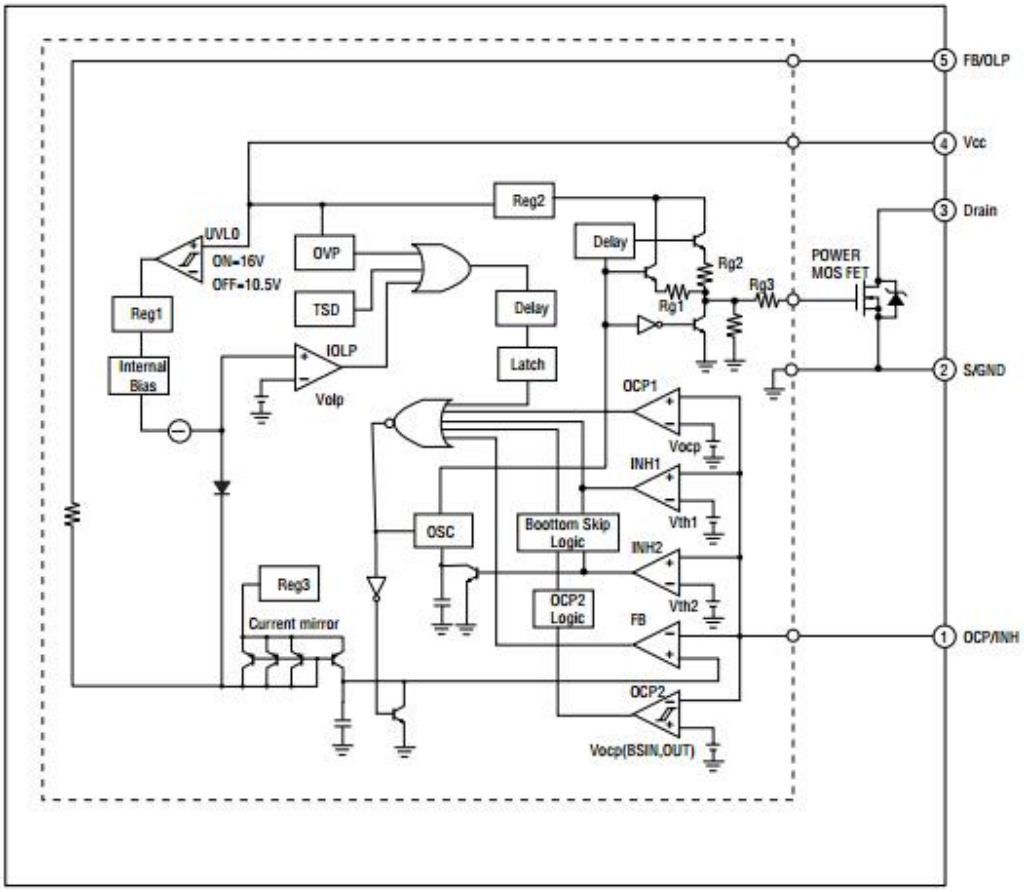
FB/OLP
Vcc
Drain
S/GND
OCP/INH
Reg2
Delay
Rg2
Rg1
Rg3
POWER
MOS FET
UVLO
ON=16V
OFF=10.5V
OVP
TSD
Delay
Latch
Reg1
Internal
Bias
IOLP
Volp
OCP1
Vocp
INH1
Vth1
OSC
Boottom Skip
Logic
INH2
Vth2
Reg3
Current mirror
OCP2
Logic
FB
OCP2
Vocp(BSIN,OUT)