aptek technologies

AMS 3089
12 kHz/16 kHz
METERING PULSE DETECTOR

DESCRIPTION

The AMS 3089 is an integrated tone detector for PABX and telephone pulse metering applications. It is fabricated in 3μ double-poly Silicon gate CMOS technology. It has been designed using switched-capacitor techniques to provide accurate and reliable operation under the control of an inexpensive colorburst (3.579545 MHz) crystal.

Specified sensitivity levels have been carefully selected to satisfy the requirements of most users, however, detection levels are adjustable for design flexibility.

FEATURES

- 3μ CMOS double-poly technology
- Low power dissipation -8 mW typical operating
- 5V single supply operation
- 14-lead dual-in-line or 16-lead SO-16 packages
- Selectable 12 kHz/16 kHz operation
- Adjustable level detector
- Meets most countries' specifications with minimum number of external components
- Both Fully Qualified and Tone Follower outputs available

PIN CONFIGURATIONS

IN-	1	14	IN+
F IN	2	13	AGND
XIN	3	12	TF
XOUT	4	11	2.5V
DGND	5	10	TA
VDD	6	9	SEL
DGND	7	8	DV

Figure 1. 14 DUAL-IN-LINE PACKAGE

IN-	1	16	IN+
F IN	2	15	AGND
XIN	3	14	TF
XOUT	4	13	2.5 V
NC	5	12	TA
DGND	6	11	NC
VDD	7	10	SEL
DGND	8	9	DV

Figure 2. 16- LEAD SO-16 PACKAGE

BLOCK DIAGRAM

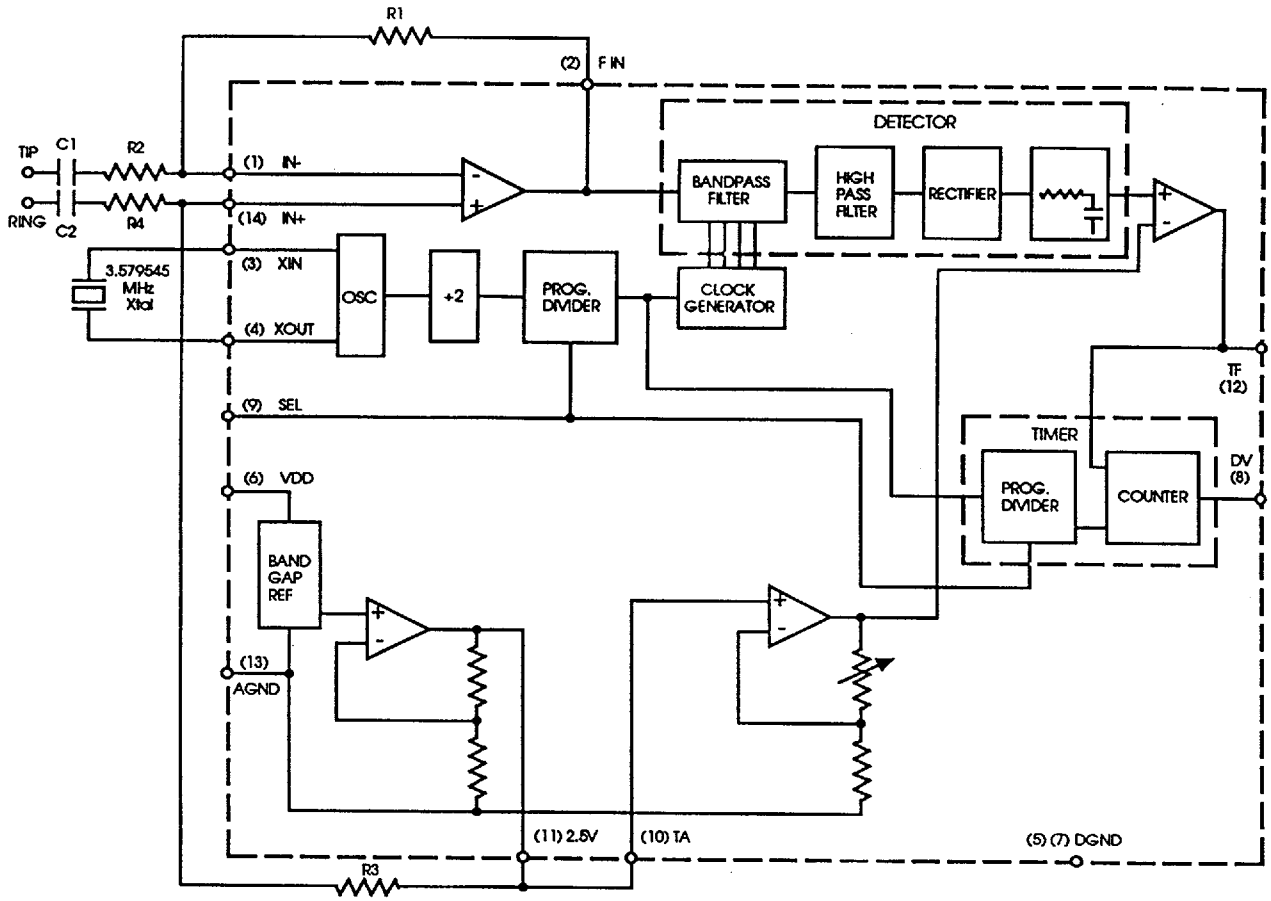

Note: Pin numbers shown for 14 pin dual-in-line package.

PIN NAMES

IN-	Analog input. Op amp inverting input	SEL	Select input
FIN	Analog output. Op amp output; input to filter	TA	Threshold adjust
XIN	Input to crystal oscillator	2.5V	Internal reference voltage
XOUT	Output of crystal oscillator	TF	Tone Follower Output
DGND	Digital ground	AGND	Most negative supply
VDD	Power supply	IN+	Analog input. Op amp non-inverting input
DV	Data valid output		

FUNCTIONAL DESCRIPTION

The AMS 3089 is an integrated tone detector for use in PABX and telephone pulse metering applications. An op amp is provided at the input for setting the detector sensitivity and interfacing to the line. The incoming tones are fed to the level detector that provides accurate level and frequency discrimination. It consists of:

- An eighth-order switched-capacitor bandpass filter synthesized from a doubly-terminated passive RLC prototype to minimize the effect of component variation on filter performance.

- A high pass filter that provides additional gain and desensitizes the detector to internal offsets.

- A full-wave rectifier and smoothing circuit that produces a DC voltage proportional to the level of the incoming tones.

- A threshold voltage derived from a bandgap reference that contains sensitivity information.

- A comparator that decides on the validity of the frequency and level of the tone.

The output of the level detector passes to the timer. Its function is to determine whether the incoming tone is of the right duration or if a valid pause has occurred. It consists of an up-down counter which is clocked by a programmable divider and enabled by the level detector. The output of the timer at DV provides a high logic level when a tone burst has met all the level and timing requirements. The output of the level detector is available at TF. Selecting this pin as the output bypasses the internal timer and enables the detector to operate in the tone follower mode, for applications where timing is not required or is to be microprocessor controlled.

The circuit operation is controlled from an inexpensive colorburst crystal (3.579545 MHz). Operating mode is set by the SEL pin. A high level at this pin (VDD) sets the detector to 12 kHz operation, while grounding it switches the mode to 16 kHz.

PIN DESCRIPTION

PIN		SYMBOL	FUNCTION
14 DIP	SO16		
1	1	IN-	Pins for input op amp. Used for setting detector sensitivity and interfacing to the line. See Applications Section.
2	2	F IN	
14	16	IN+	
3	3	XIN	Input and output for crystal oscillator. The crystal should be placed across these pins.
4	4	XOUT	
5, 7	6, 8	DGND	Digital ground. Both pins must be connected.
6	7	VDD	Power supply. The most positive voltage in circuit.
8	9	DV	Data valid output.
9	10	SEL	Select pin. VDD selects 12 kHz; GND selects 16 kHz.
10	12	TA	Threshold adjust. Used for setting sensitivity. See Applications Section. Normally shorted to 2.5 V
11	13	2.5V	Internal reference.
12	14	TF	Tone follower output. Output prior to timer.
13	15	AGND	Most negative supply. Normally ground.

ELECTRICAL CHARACTERISTICS

ABSOLUTE MAXIMUM RATINGS

Supply voltage	-0.3 to 7.0 V
Input voltage at any pin	-0.3 to (VDD + 0.3 V)
Maximum power dissipation	800 mW
Operating temperature range	-30°C to 70°C
Storage temperature range	-40°C to 85°C

Note: Exceeding MAX ratings may cause permanent damage to the device and may affect device reliability. Functional operation beyond these limits is not guaranteed.

D. C. CHARACTERISTICS

(T_A = 25° C, V_{DD} = + 5V ± 5%, AGND = 0V, DGND = 0V)

PARAMETER	SYMBOL	LIMITS MIN	TYP	MAX	UNITS	CONDITION
Supply current	I_{DD}		1.5	2.0	mA	Input op amp connected as buffer. No. load
Low level output voltage	V_{OL}		0.1	0.4	V	Data Valid Output I_{OL} = 1.0 mA
High level output voltage	V_{OH}	4.5	4.8		V	Data Valid Output I_{OH} = -1.0 mA
Low level output voltage	V_{OL}		0.1	0.4	V	Tone Follower Output I_{OL} = 80μA (20 pF max)
High level output voltage	V_{OH}	4.5	4.8		V	Tone Follower Output I_{OH} = -240μA (20pF max)
Reference voltage	V_{REF}		2.48		V	No load

12 kHz DETECTOR

(DV Output; V_{DD} = 5.0V, AGND = 0V, DGND = 0V)

PARAMETER	SYMBOL	FREQUENCY	LIMITS MIN	TYP	MAX	UNITS	CONDITIONS
Must detect sensitivity	S_D	12 kHz ± 1%	-19.3		22.2	dBm	Input amplifier gain at -34.58 dB 0dBm = 775 mV_{RMS}
Must not detect sensitivity	$\overline{S_D}$	12 kHz ± 6%			-24.3	dBm	
		≤11280			-10.74		
		≥12720			-10.74		
		≤10800			-3.5		
		≥13200			-3.5		
		≤10500			22.2		
		≥13500			22.2		

16 kHz DETECTOR

(DV Output; V_{DD} = 5.0V, AGND = 0V, DGND = 0V)

PARAMETER	SYMBOL	FREQUENCY	LIMITS MIN	LIMITS TYP	LIMITS MAX	UNITS	CONDITIONS
Must detect sensitivity	S_D	16 kHz ± 1%	-24		+17.77	dBm	Input amplifier Gain at -30.83dB 0dBm = 775 mV_{rms}
Must not detect sensitivity	$\overline{S_D}$	16 kHz ± 1%			-30	dBm	
		≤15040			-14.26		
		≥16960			-14.26		
		≤14400			-6.077		
		≥17600			-6.077		
		≤14000			+17.77		
		≥18000			+17.77		

A. C. CHARACTERISTICS

(DV Output; F_O = 12kHz or 16kHz)

PARAMETER	SYMBOL	FREQUENCY	LIMITS MIN	LIMITS TYP	LIMITS MAX	UNITS	COMMENTS
Must detect pulse	tpwd	f_o ±1%	50	45		msec	Must detect pulses ≥ 50ms
Must not detect pulse	$\overline{tpwd}$	f_o ±1%		43	40	msec	Must not detect pulses ≤ 40ms
Must detect pause	tpd	f_o ±1%	75	45		msec	Must detect pauses ≥ 75ms
Must not detect pause	$\overline{tpd}$	f_o ±1%		45	30	msec	Must not detect pauses ≤ 30ms

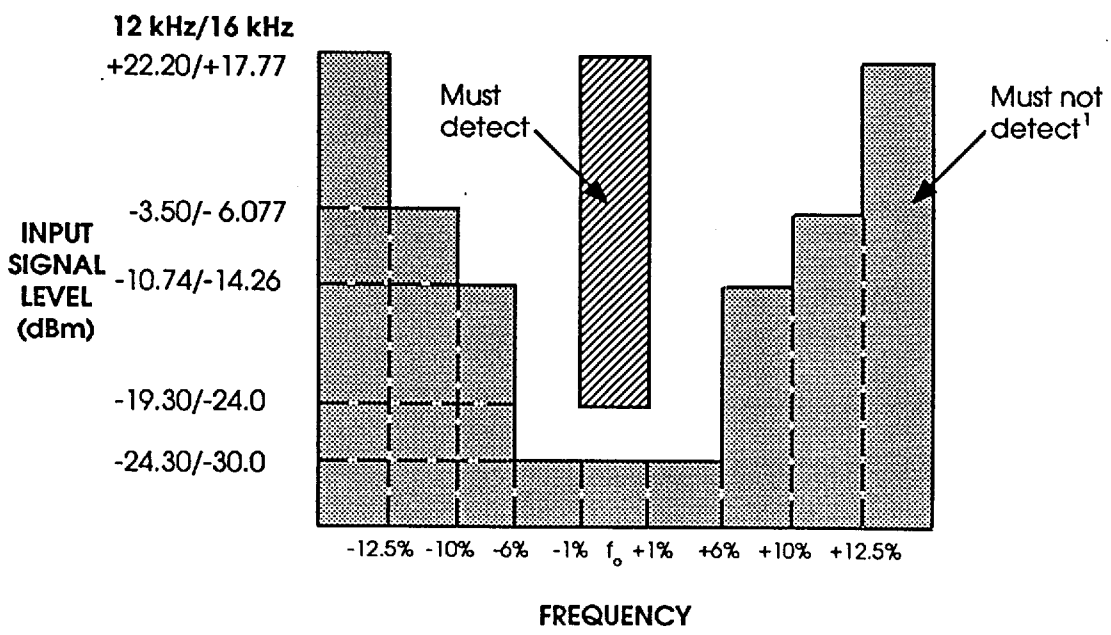

[1] Must not detect tone of any duration

TONE FOLLOWER OUTPUT CHARACTERISTICS

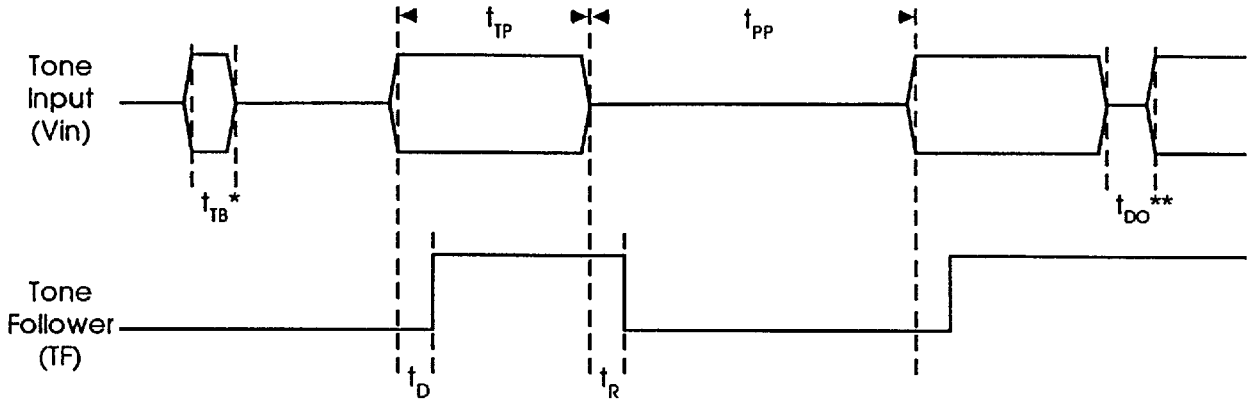

* t_{TB} = Tone Bursts of less than t_D (Detect Time) are not detected.

** t_{DO} = Tone Drop Outs of less than t_R (Release Time) are not detected.

TIMING DIAGRAM

TIMING CHARACTERISTICS

T_A =25° C, V_{DD} = +5V ± 5%, AGND = 0V, DGND = 0V, For signals from minimum detect sensitivity to +8dbm

PARAMETER	CONDITION	MIN	MAX	UNITS
t_D Detect Time	12kHz		5.0	ms
	16kHz		5.0	ms
t_R Release Time	12kHz		12.0	ms
	16kHz		14.0	ms
t_{TP} Valid Tone Period	12kHz	5.0		ms
	16kHz	5.0		ms
t_{PP} Valid Pause Period	12kHz	12.0		ms
	16kHz	14.0		ms

TYPICAL CHARACTERISTICS

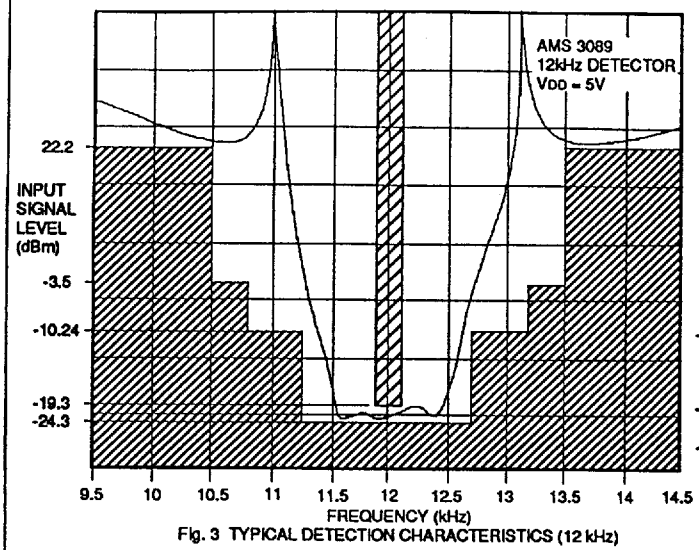

Fig. 3 TYPICAL DETECTION CHARACTERISTICS (12 kHz)

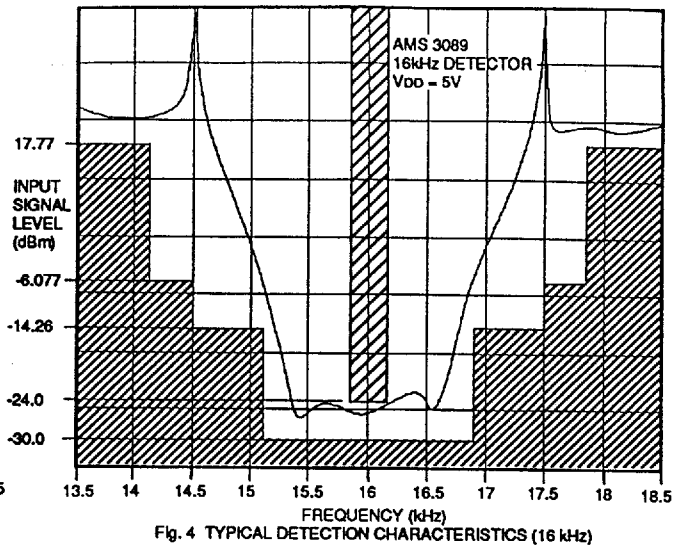

Fig. 4 TYPICAL DETECTION CHARACTERISTICS (16 kHz)

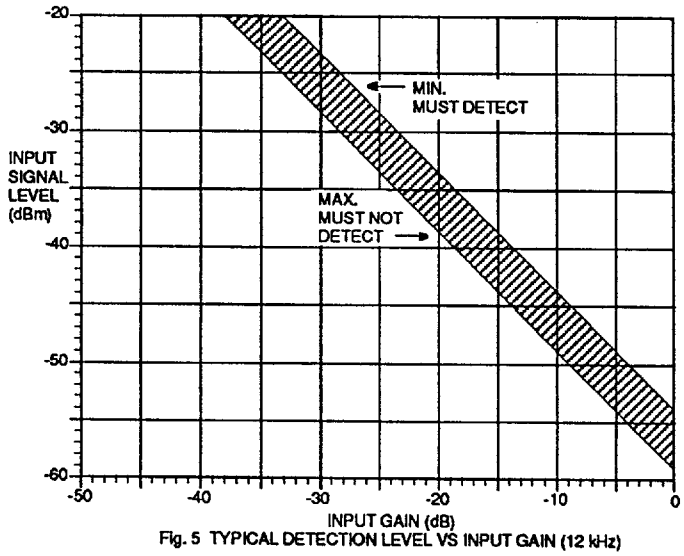

Fig. 5 TYPICAL DETECTION LEVEL VS INPUT GAIN (12 kHz)

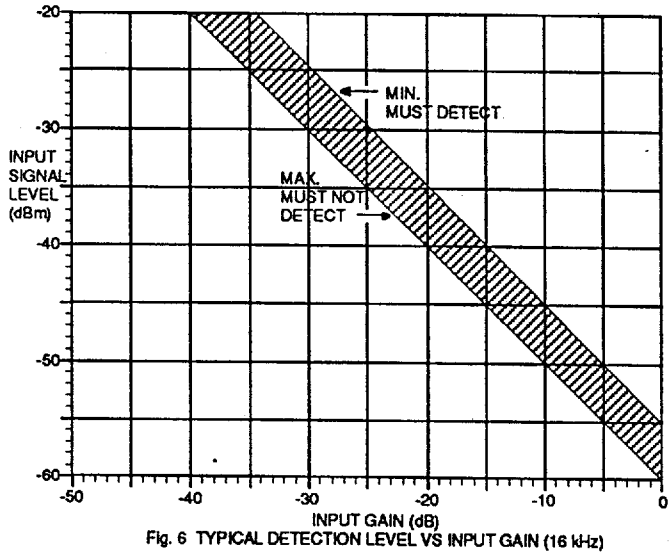

Fig. 6 TYPICAL DETECTION LEVEL VS INPUT GAIN (16 kHz)

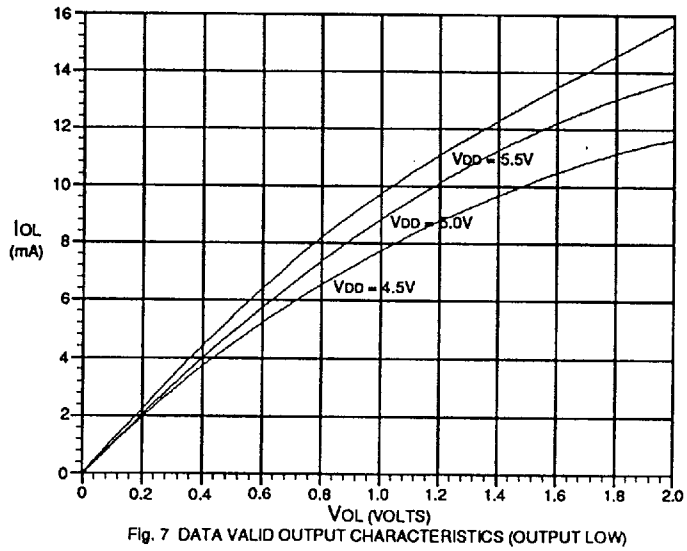

Fig. 7 DATA VALID OUTPUT CHARACTERISTICS (OUTPUT LOW)

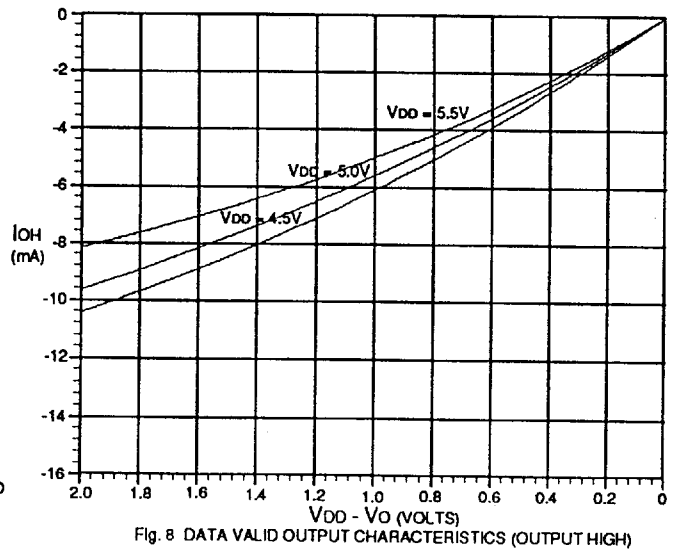

Fig. 8 DATA VALID OUTPUT CHARACTERISTICS (OUTPUT HIGH)

APPLICATIONS

INPUT CONFIGURATIONS

Recommended input connections for the AMS 3089 are shown in Figures 9 - 12.

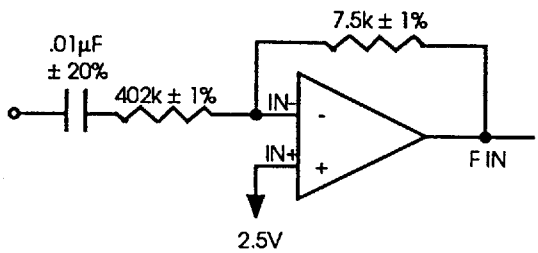

Figure 9. **12 kHz Detector Single Ended Configuration**

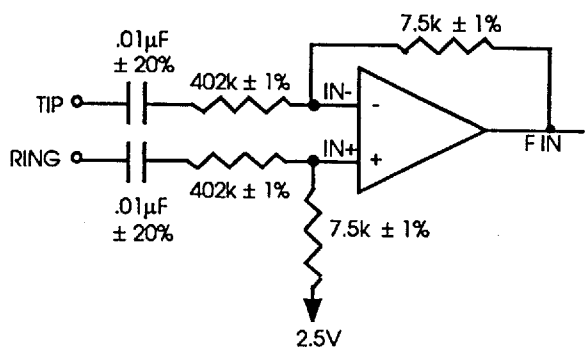

Figure 10. **12 kHz Detector Differential Configuration**

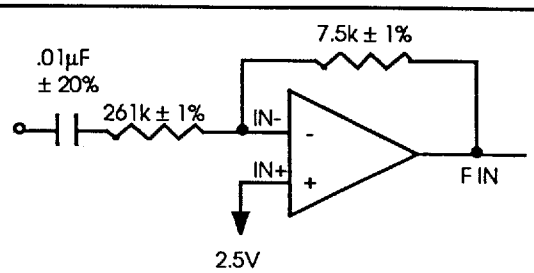

Figure 11. **16 kHz Detector Single Ended Configuration**

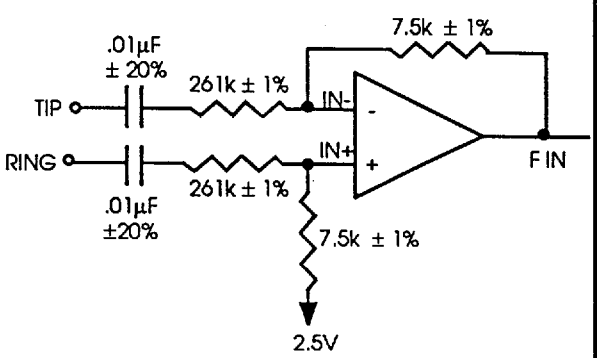

Figure 12. **16 kHz Detector Differential Configuration**

ALIASING CONSIDERATIONS

The AMS 3089 detector has been designed using switched-capacitor techniques and as all sampled-data systems is susceptible to aliasing distortion. In most systems this will not be a problem. However, if high frequency signals (above 200 kHz) exists at the input, the device should be bandlimited. This can be accomplished by placing a capacitor in parallel with the 7.5 kΩ feedback resistors. The value of the capacitor should be 1000 pF ± 10% for the 12 kHz detector and 750 pF ± 10% for the 16 kHz detector. Under worst case conditions these capacitors will introduce an additional 1.4dB loss in the detectionband. The gain of the input amplifier should be adjusted by an equal amount in order to maintain the same detection levels.

TYPICAL CONNECTION DIAGRAM

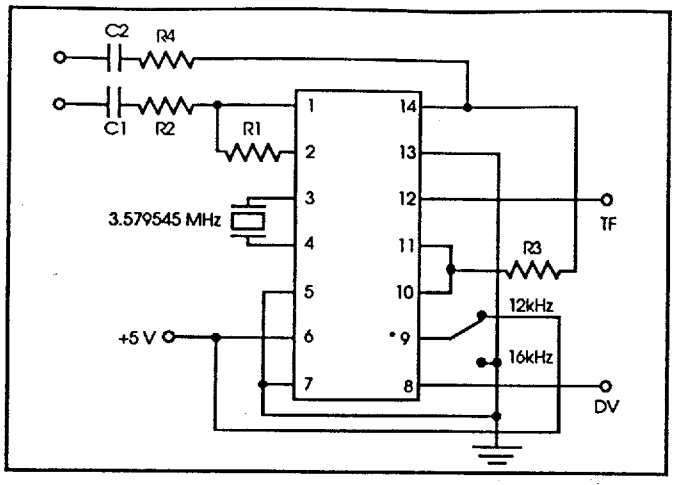

* Shown for 12 kHz operation. Pin 9 must be connected to GND for 16 kHz operation.
Note: Pin numbers shown for 14 pin dual-in-line package.

SENSITIVITY ADJUSTMENTS

There are two ways to adjust the level sensitivity of the AMS 3089:

- Adjusting the gain of the input op-amp.
- Adjusting the voltage at the Threshold Adjust (TA) pin.

Figures 5 and 6 in the typical characteristics section show the variation of detection level as a function of the gain of the input op amp. The variation of detection level as a function of voltage at TA is shown in *Figures 13 and 14* for the 12 kHz and 16 kHz detector respectively.

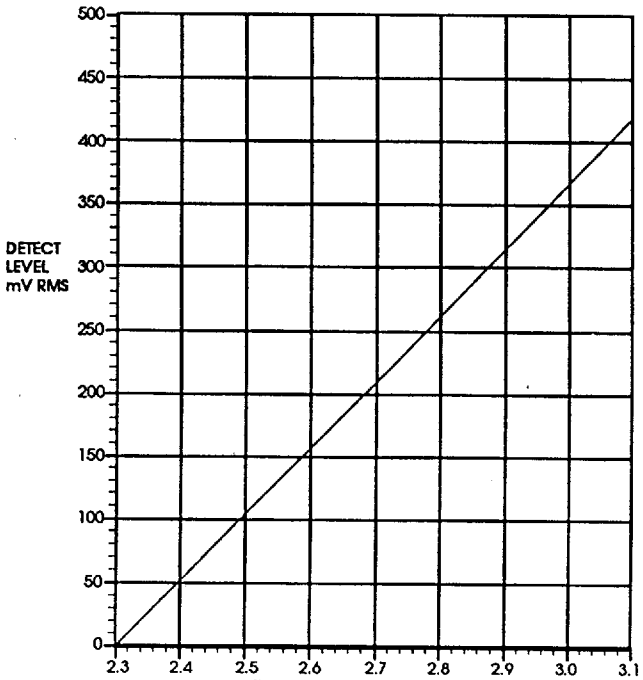

Figure 13. VOLTAGE at TA. (V)
12 kHz DETECTOR

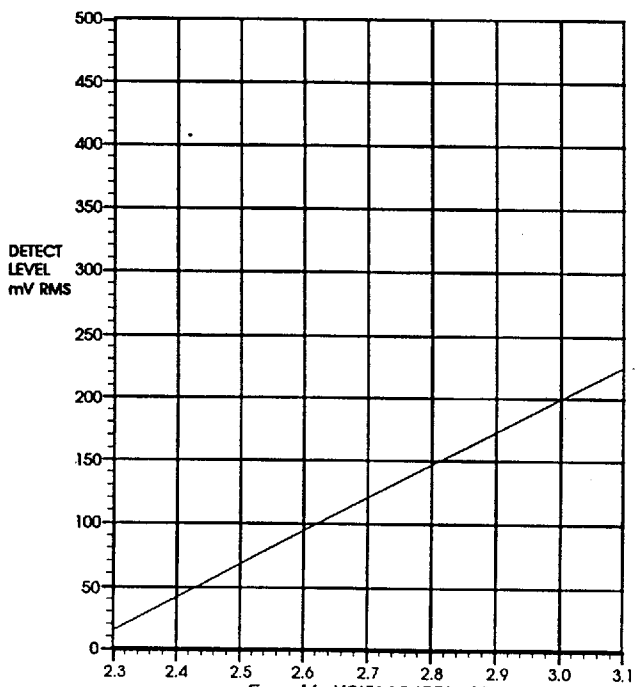

Figure 14. VOLTAGE AT TA. (V)
16 kHz DETECTOR

PACKAGE OUTLINE DRAWINGS

	MILLIMETERS		INCHES	
DIM	MIN	MAX	MIN	MAX
A	16.89	16.891	.655	.665
B	6.223	6.477	.245	.255
C	15.24	REF	.600	REF
D	3.175		.125	
E	2.286	2.794	.090	.110
F	0.406	0.508	.016	.020
G		8.225		.325
H		10.16		.400
J	0.254	TYP	.010	TYP

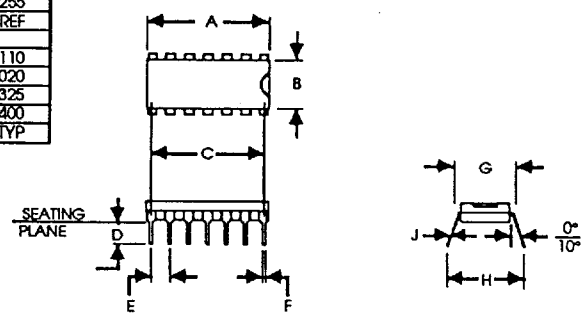

14-Pin DIP Package

	MILLIMETERS		INCHES	
DIM	MIN	MAX	MIN	MAX
A	10.16	10.43	.400	.411
B	7.39	7.59	.291	.299
C	2.36	2.64	.093	.104
D	.36	.48	.014	.019
F	.51	.88	.020	.035
G	1.27	BSC	.050	BSC
J	.20	.30	.010	.012
K	.25	.30	.010	.012
L	8.50	8.90	.335	.351
M	0°	7°	0°	7°
P	10.08	10.54	.397	.415

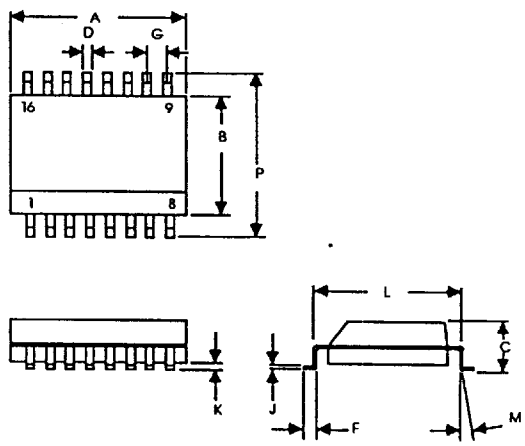

16-Lead SO Plastic Package

ORDERING INFORMATION: DIP Package = 3089 (no suffix)
SO Package = 3089DW