MAXIM

CMOS Analog Switches

General Description

Maxim's DG304-DG307 and DG304A-DG307A CMOS dual and quad analog switches combine low power operation with fast switching times and superior DC and AC switch characteristics. On resistance is less than 50Ω and is essentially constant over the analog signal range. Device specifications are ideal for battery powered circuitry.

These switches are available in a variety of formats as outlined below in the Pin Configurations section. The switch control logic inputs are compatible with CMOS logic. Also featured are "break-before-make" switching and low charge injection.

Maxim's DG304-DG307 and DG304A-DG307A families are electrically compatible and pin compatible with the original manufacturer's devices. All devices will operate with power supplies ranging from ±5V to ±18V. Single supply operation is implemented by connecting V^- to GND.

Applications

Portable Instruments

Low Power Sample/Holds

Power Supply Switching

Programmable Gain Amplifiers

SPDT and DPDT Functions

Process Control and Telemetry

Features

- **Monolithic Low Power CMOS**
- **Latch-Up Proof Construction**
- **Fully Compatible 2nd Source**
- **Low On Resistance, <50Ω**
- **Fast Switching Time**
- **V^+ to V^- Analog Signal Range**
- **Single Supply Capability**

Ordering Information

PART	TEMP. RANGE	PACKAGE
DG304C/D	0°C to +70°C	Dice
DG304CJ	0°C to +70°C	14 Lead Plastic DIP
DG304CWE	0°C to +70°C	16 Lead Wide SO
DG304CK	0°C to +70°C	14 Lead CERDIP
DG304BWE	-25°C to +85°C	16 Lead Wide SO
DG304BK	-25°C to +85°C	14 Lead CERDIP
DG304BA	-25°C to +85°C	10 Lead Metal Can
DG304AK	-55°C to +125°C	14 Lead CERDIP
DG304AA	-55°C to +125°C	10 Lead Metal Can

Ordering Information continued at end of data sheet.

Pin Configurations

Top View

*Dual SPST DG304/DG304A

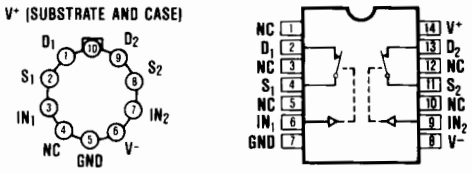

LOGIC	SWITCH
0	OFF
1	ON

*Note: Pins 8 and 9 of the 16-lead Small Outline Package are not connected.

*Dual DPST DG306/DG306A

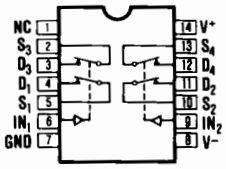

LOGIC	SWITCH
0	OFF
1	ON

*SPDT DG305/DG305A

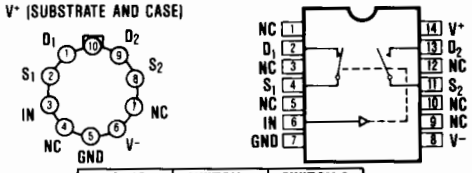

LOGIC	SWITCH 1	SWITCH 2
0	OFF	ON
1	ON	OFF

*Dual SPDT DG307/DG307A

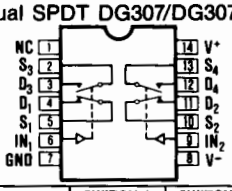

LOGIC	SWITCH 1 SWITCH 2	SWITCH 3 SWITCH 4
0	OFF	ON
1	ON	OFF

Switch states are for Logic "1" Inputs (Positive Logic).

For free samples & the latest literature: http://www.maxim-ic.com, or phone 1-800-998-8800

CMOS Analog Switches

ABSOLUTE MAXIMUM RATINGS

Voltages Referenced to V^-
V^+ (DG304-DG307) 36V
V^+ (DG304A-DG307A) 44V
GND 25V
Digital Inputs, V_S, V_D (Note 1) ..... -4V to (V^+ + 4V) or 30mA, whichever occurs first.
Current, Any Terminal Except S or D 30mA
Continuous Current, S or D 30mA
(Pulsed at 1msec, 10% duty cycle max) 100mA
Storage Temperature (A & B Suffix) ..... -65°C to 150°C
(C Suffix) ..... -65°C to 125°C

Operating Temperature (A Suffix) ..... -55°C to 125°C
(B Suffix) ..... -25°C to 85°C
(C Suffix) ..... 0°C to 70°C
Lead Temperature (Soldering 10 sec.) ..... +300°C
Power Dissipation*
Cerdip (K) (Derate 11mW/°C above 75°C) 825mW
Plastic DIP (J) (Derate 6.5mW/°C above 25°C) .. 470mW
Metal Can (A) (Derate 6mW/°C above 75°C) 450mW

* Device mounted with all leads soldered or welded to PC board.

Stresses listed under "Absolute Maximum Ratings" may be applied (one at a time) to devices without resulting in permanent damage. These are stress ratings only, and functional operation of the device at these or any other conditions above those indicated in the operational sections of the specifications is not implied. Exposure to absolute maximum ratings conditions for extended periods may affect device reliability.

ELECTRICAL CHARACTERISTICS (V^+ = +15V, V^- = -15V, GND = 0V, T_A = 25°C, unless otherwise indicated)

	PARAMETER	SYMBOL	TEST CONDITIONS		DG304-DG307A DG304A-DG307AA MIN (Note 2)	TYP (Note 3)	MAX	DG304-DG307B/C DG304A-DG307AB/C MIN (Note 2)	TYP (Note 3)	MAX	UNITS
SWITCH	Analog Signal Range	V_{ANALOG}	I_S = 10mA, V_{in} = 3.5V or 11.0V		-15		15	-15		15	V
	Drain-Source ON Resistance	$r_{DS(on)}$	V_{in} = 3.5V or V_{in} = 11.0V	I_S = -10mA, V_D = 10V		30	50		30	50	Ω
				I_S = 10mA, V_D = -10V		30	50		30	50	
	Source OFF Leakage Current	$I_{S(off)}$		V_S = 14V, V_D = -14V		0.1	1		0.1	5	nA
				V_S = -14V, V_D = 14V	-1	-0.1		-5	-0.1		
	Drain OFF Leakage Current	$I_{D(off)}$		V_S = -14V, V_D = 14V		0.1	1		0.1	5	
				V_S = 14V, V_D = -14V	-1	-0.1		-5	-0.1		
	Drain ON Leakage Current	$I_{D(on)}$		V_D = V_S = 14V		0.1	1		0.1	5	
				V_D = V_S = -14V	-2	-0.1		-5	-0.1		
INPUT	Input Current/ Voltage High	I_{INH}	V_{in} = 5.0V		-1	-0.001		-1	-0.001		μA
			V_{in} = 15V			0.001	1		0.001	1	
	Input Current/ Voltage Low	I_{INL}	V_{in} = 0V		-1	-0.001		-1	-0.001		
DYNAMIC	Turn-ON Time	t_{on}	See Switching Time Test Circuit			110	250		110	250	ns
	Turn-OFF Time	t_{off}				70	150		70	150	
	Break-Before-Make Interval	t_{on}-t_{off}	See Break-Before-Make Time Test Circuit DG305(A)/DG307(A) Only			50			50		
	Charge Injection	Q	C_L = 10nF, R_{gen} = 0Ω, V_{gen} = 0V			12			12		pC
	Source OFF Capacitance	$C_{S(off)}$	f = 1MHz, V_{in} = 3.5V or V_{in} = 11.0V	V_S = 0V		14			14		pF
	Drain OFF Capacitance	$C_{D(off)}$		V_D = 0V		14			14		
	Channel ON Capacitance	$C_{D(on)}$ + $C_{S(on)}$		V_S = V_D = 0V		40			40		
	Input Capacitance	C_{in}	f = 1MHz	V_{in} = 0V		6			6		
				V_{in} = 15V		7			7		
	Off Isolation (Note 4)		V_{in} = 0V, R_L = 1kΩ V_S = 1 V_{RMS}, f = 500kHz			62			62		dB
	Crosstalk (Channel to Channel)					74			74		

(See Notes next page).

ELECTRICAL CHARACTERISTICS (Continued)

(V^+ = +15V, V^- = -15V, GND = 0V, T_A = 25°C, unless otherwise indicated)

	PARAMETER	SYMBOL	TEST CONDITIONS	DG304-DG307A DG304A-DG307AA MIN (Note 2)	TYP (Note 3)	MAX	DG304-DG307B/C DG304A-DG307AB/C MIN (Note 2)	TYP (Note 3)	MAX	UNITS
SUPPLY	Positive Supply Current	I^+	V_{in} = 15.0V (All Inputs)		0.001	10		0.001	10	µA
	Negative Supply Current	I^-		-10	-0.001		-10	-0.001		
	Positive Supply Current	I^+	V_{in} = 0V (All Inputs)		0.001	10		0.001	10	
	Negative Supply Current	I^-		-10	-0.001		-10	-0.001		

ELECTRICAL CHARACTERISTICS (Over Temperature)

(V^+ = +15V, GND = 0V, T_A = Over Temperature Range, unless otherwise noted)

	PARAMETER	SYMBOL	TEST CONDITIONS		DG304-DG307A DG304A-DG307AA MIN (Note 2)	TYP (Note 3)	MAX	DG304-DG307B/C DG304A-DG307AB/C MIN (Note 2)	TYP (Note 3)	MAX	UNITS
SWITCH	Analog Signal Range	V_{ANALOG}	I_S = 10mA, V_{in} = 3.5V or 11.0V		-15		15	-15		15	V
	Drain-Source ON Resistance	$r_{DS(on)}$	V_{in} = 3.5V or V_{in} = 11.0V	I_S = -10mA, V_D = 10V			75			75	Ω
				I_S = 10mA, V_D = -10V			75			75	
	Source OFF Leakage Current	$I_{S(off)}$		V_S = 14V, V_D = -14V			100			100	nA
				V_S = -14V, V_D = 14V	-100			-100			
	Drain OFF Leakage Current	$I_{D(off)}$		V_S = -14V, V_D = 14V			100			100	
				V_S = 14V, V_D = -14V	-100			-100			
	Drain ON Leakage Current	$I_{D(on)}$		V_D = V_S = 14V			100			100	
				V_D = V_S = -14V	-200			-200			
INPUT	Input Current/ Voltage High	I_{INH}	V_{in} = 5.0V		-1			-10			µA
			V_{in} = 15V				1			10	
	Input Current/ Voltage Low	I_{INL}	V_{in} = 0V		-1			-10			
SUPPLY	Positive Supply Current	I^+	V_{in} = 15.0V (All Inputs)				100			200	µA
	Negative Supply Current	I^-			-100			-200			
	Positive Supply Current	I^+	V_{in} = 0V (All Inputs)				100			200	
	Negative Supply Current	I^-			-100			-200			

Note 1: Signals on S_X, D_X, or IN_X exceeding V^+ or V^- will be clamped by internal diodes. Limit diode forward current to maximum current ratings.

Note 2: The algebraic convention whereby the most negative value is a minimum, and the most positive value is a maximum is used in this data sheet.

Note 3: Typical values are for DESIGN AID ONLY, not guaranteed nor subject to production testing.

Note 4: OFF isolation = $20 \log \frac{V_S}{V_D}$, V_S = input to OFF switch, V_D = Output.

CMOS Analog Switches

Typical Operating Characteristics

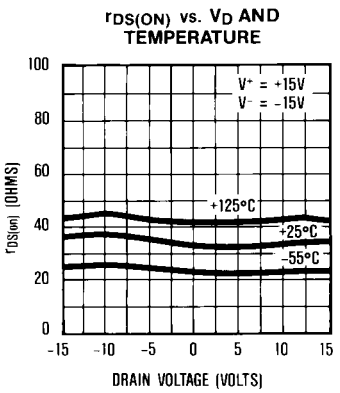

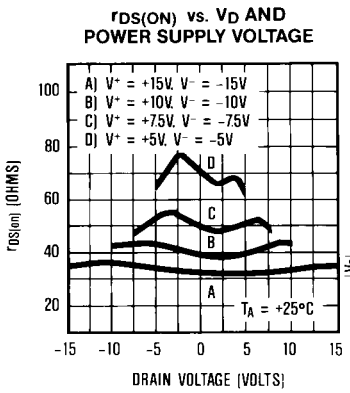

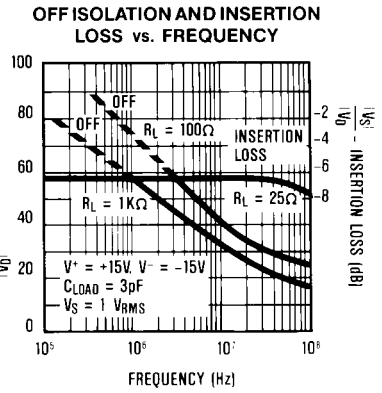

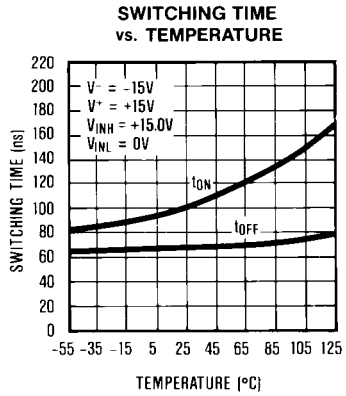

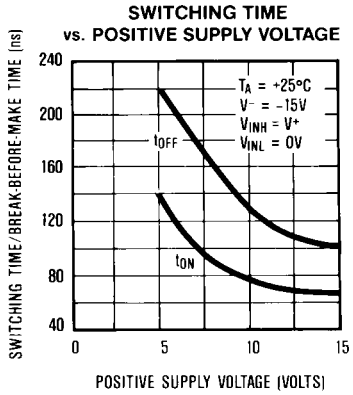

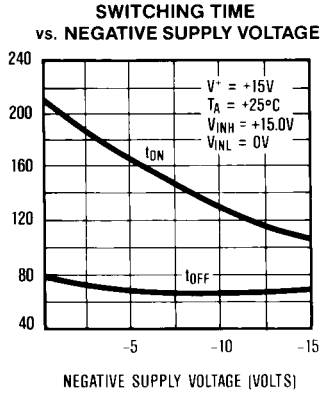

Test Circuits

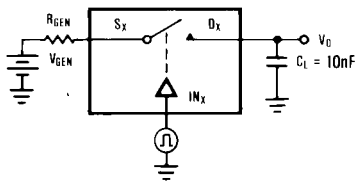

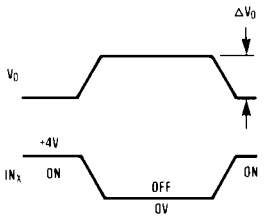

ΔV_O = Δ MEASURED VOLTAGE ERROR DUE TO CHARGE INJECTION
THE ERROR VOLTAGE IN COULOMBS IS $\Delta Q = C_L \times \Delta V_O$.

Figure 1. Charge Injection Test Circuit.

Test Circuits (Continued)

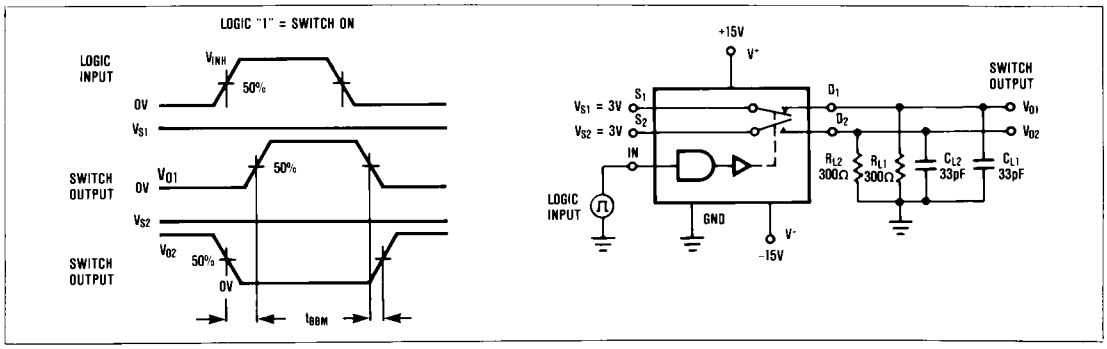

Figure 2. Break-Before-Make Time Test Circuit SPDT DG305(A), DG307(A).

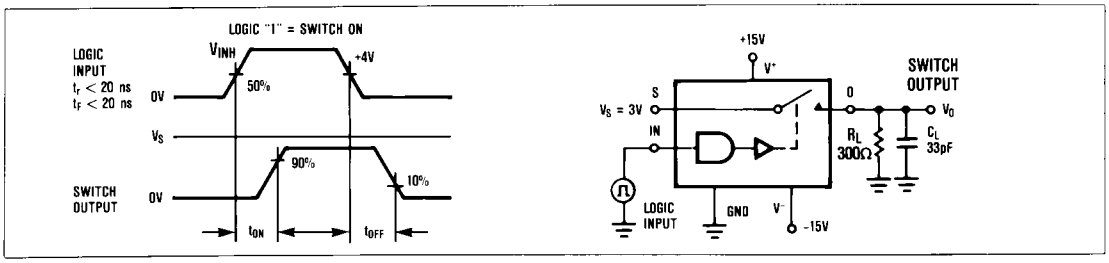

Figure 3. Switching Time Test Circuit.

Application Information

All DG304 family switches will operate with ±5 to ±15V power supplies. They can also be used with single ended power supplies ranging from +10V to +30V where the V^- terminal is connected to ground. In either case analog signals ranging from V^+ to V^- can be switched.

The on resistance variation with analog signal and supply voltage is shown in the Typical Operating Characteristics graphs. The temperature coefficient of R_{ON} is typically 0.5%/°C. Typical on resistance matching from channel to channel is 10%. In addition, Table 1 outlines some typical parameters for single supply operation.

Table 1. Typical Single Supply Parameters

	V^+ SUPPLY VOLTAGE (V^- = 0V)			
	+10V	+15V	+20V	+30V
Switching Time (R_L = 1kΩ)				
t_{ON}	220ns	180ns	165ns	110ns
t_{OFF}	60ns	40ns	30ns	20ns
On Resistance				
V_{SIGNAL} = +1V	71Ω	51Ω	42Ω	31Ω
V_{SIGNAL} = $V^+/2$	77Ω	54Ω	43Ω	30Ω
V_{SIGNAL} = V^+	84Ω	63Ω	54Ω	43Ω
Input Logic Levels	3.5V, 11.0V	3.5V, 11.0V	3.5V, 12.5V	3.5V, 22.0V

The charge injection test circuit is shown in Figure 1. Table 2 lists the typical injected charge for DG304 series switches with various input voltages.

Table 2. Charge Injection (±15V Supplies)

ANALOG INPUT	INJECTED Q
+10V	4pC
+5V	8pC
0V	12pC
-5V	8pC
-10V	5pC

CMOS Analog Switches

Chip Topography

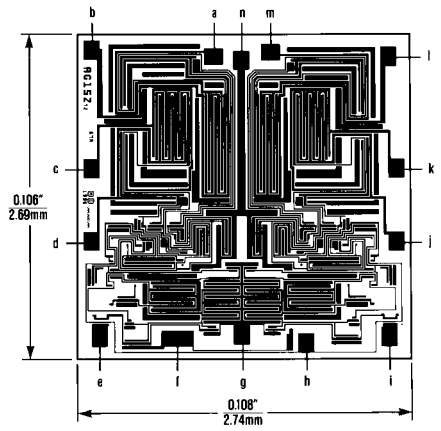

DIE PAD	DG304 DG304A	DG305 DG305A	DG306/307 DG306A/307A
a	N.C.	N.C.	S3
b	D1	D1	D3
c	D1	S1	D1
d	S1	IN1	S1
e	IN1	IN1	IN1
f	V^+	V^+	V^+
g	GND	GND	GND
h	V^-	V^-	V^-
i	IN2	GND	IN2
j	S2	V^-	S2
k	D2	S2	D2
l	D2	D2	D4
m	N.C.	N.C.	S4
n	V^+	V^+	V^+

Ordering Information (continued)

PART	TEMP. RANGE	PACKAGE
DG304AC/D	0°C to +70°C	Dice
DG304ACJ	0°C to +70°C	14 Lead Plastic DIP
DG304ACWE	0°C to +70°C	16 Lead Wide SO
DG304ACK	0°C to +70°C	14 Lead CERDIP
DG304ABWE	-25°C to +85°C	16 Lead Wide SO
DG304ABK	-25°C to +85°C	14 Lead CERDIP
DG304ABA	-25°C to +85°C	10 Lead Metal Can
DG305C/D	0°C to +70°C	Dice
DG305CJ	0°C to +70°C	14 Lead Plastic DIP
DG305CWE	0°C to +70°C	16 Lead Wide SO
DG305CK	0°C to +70°C	14 Lead CERDIP
DG305BWE	-25°C to +85°C	16 Lead Wide SO
DG305BK	-25°C to +85°C	14 Lead CERDIP
DG305BA	-25°C to +85°C	10 Lead Metal Can
DG305AK	-55°C to +125°C	14 Lead CERDIP
DG305AA	-55°C to +125°C	10 Lead Metal Can
DG305AC/D	0°C to +70°C	Dice
DG305ACJ	0°C to +70°C	14 Lead Plastic DIP
DG305ACWE	0°C to +70°C	16 Lead Wide SO
DG305ACK	0°C to +70°C	14 Lead CERDIP
DG305ABWE	-25°C to +85°C	16 Lead Wide SO
DG305ABK	-25°C to +85°C	14 Lead CERDIP
DG305ABA	-25°C to +85°C	10 Lead Metal Can

PART	TEMP. RANGE	PACKAGE
DG306C/D	0°C to +70°C	Dice
DG306CJ	0°C to +70°C	14 Lead Plastic DIP
DG306CWE	0°C to +70°C	16 Lead Wide SO
DG306CK	0°C to +70°C	14 Lead CERDIP
DG306BWE	-25°C to +85°C	16 Lead Wide SO
DG306BK	-25°C to +85°C	14 Lead CERDIP
DG306AK	-55°C to +125°C	14 Lead CERDIP
DG306AC/D	0°C to +70°C	Dice
DG306ACJ	0°C to +70°C	14 Lead Plastic DIP
DG306ACWE	0°C to +70°C	16 Lead Wide SO
DG306ACK	0°C to +70°C	14 Lead CERDIP
DG306ABWE	-25°C to +85°C	16 Lead Wide SO
DG306ABK	-25°C to +85°C	14 Lead CERDIP
DG307C/D	0°C to +70°C	Dice
DG307CJ	0°C to +70°C	14 Lead Plastic DIP
DG307CWE	0°C to +70°C	16 Lead Wide SO
DG307CK	0°C to +70°C	14 Lead CERDIP
DG307BWE	-25°C to +85°C	16 Lead Wide SO
DG307BK	-25°C to +85°C	14 Lead CERDIP
DG307AK	-55°C to +125°C	14 Lead CERDIP
DG307AC/D	0°C to +70°C	Dice
DG307ACJ	0°C to +70°C	14 Lead Plastic DIP
DG307ACWE	0°C to +70°C	16 Lead Wide SO
DG307ACK	0°C to +70°C	14 Lead CERDIP
DG307ABWE	-25°C to +85°C	16 Lead Wide SO
DG307ABK	-25°C to +85°C	14 Lead CERDIP

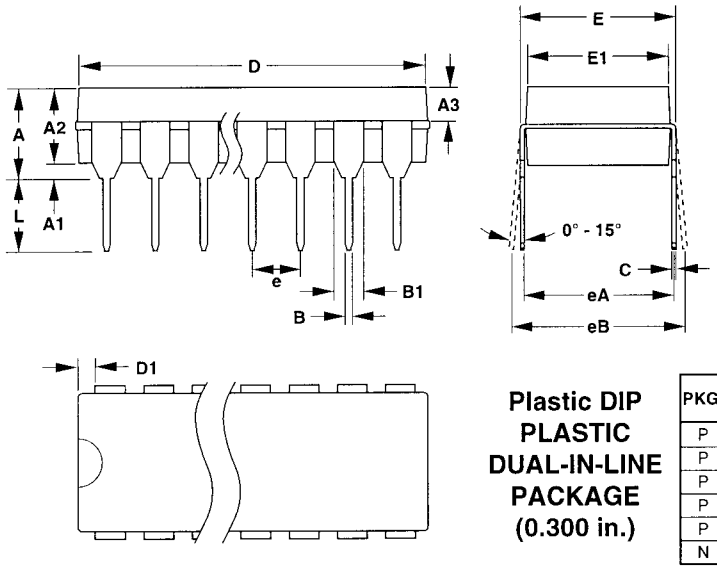

DIM	INCHES		MILLIMETERS	
	MIN	MAX	MIN	MAX
A	–	0.200	–	5.08
A1	0.015	–	0.38	–
A2	0.125	0.175	3.18	4.45
A3	0.055	0.080	1.40	2.03
B	0.016	0.022	0.41	0.56
B1	0.045	0.065	1.14	1.65
C	0.008	0.012	0.20	0.30
D1	0.005	0.080	0.13	2.03
E	0.300	0.325	7.62	8.26
E1	0.240	0.310	6.10	7.87
e	0.100	–	2.54	–
eA	0.300	–	7.62	–
eB	–	0.400	–	10.16
L	0.115	0.150	2.92	3.81

Plastic DIP
PLASTIC
DUAL-IN-LINE
PACKAGE
(0.300 in.)

PKG.	DIM	PINS	INCHES		MILLIMETERS	
			MIN	MAX	MIN	MAX
P	D	8	0.348	0.390	8.84	9.91
P	D	14	0.735	0.765	18.67	19.43
P	D	16	0.745	0.765	18.92	19.43
P	D	18	0.885	0.915	22.48	23.24
P	D	20	1.015	1.045	25.78	26.54
N	D	24	1.14	1.265	28.96	32.13

21-0043A

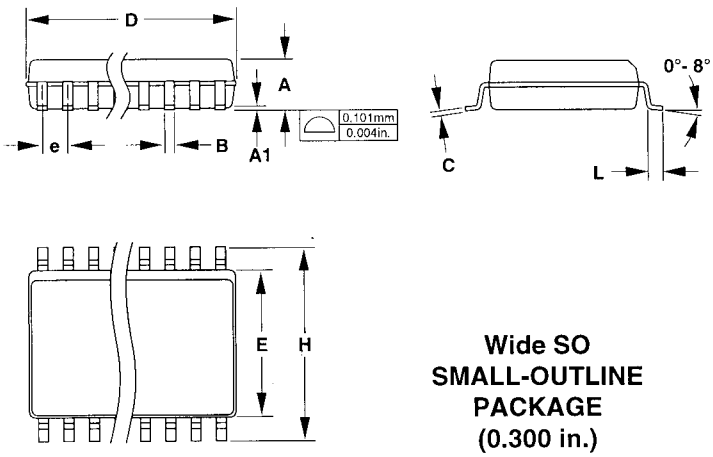

DIM	INCHES		MILLIMETERS	
	MIN	MAX	MIN	MAX
A	0.093	0.104	2.35	2.65
A1	0.004	0.012	0.10	0.30
B	0.014	0.019	0.35	0.49
C	0.009	0.013	0.23	0.32
E	0.291	0.299	7.40	7.60
e	0.050		1.27	
H	0.394	0.419	10.00	10.65
L	0.016	0.050	0.40	1.27

Wide SO
SMALL-OUTLINE
PACKAGE
(0.300 in.)

DIM	PINS	INCHES		MILLIMETERS	
		MIN	MAX	MIN	MAX
D	16	0.398	0.413	10.10	10.50
D	18	0.447	0.463	11.35	11.75
D	20	0.496	0.512	12.60	13.00
D	24	0.598	0.614	15.20	15.60
D	28	0.697	0.713	17.70	18.10

21-0042A

CMOS Analog Switches

Package Information (continued)

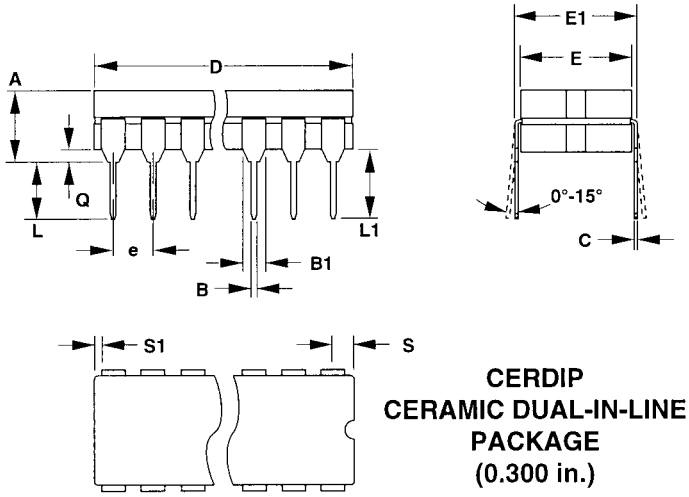

CERDIP
CERAMIC DUAL-IN-LINE
PACKAGE
(0.300 in.)

DIM	INCHES		MILLIMETERS	
	MIN	MAX	MIN	MAX
A	–	0.200	–	5.08
B	0.014	0.023	0.36	0.58
B1	0.038	0.065	0.97	1.65
C	0.008	0.015	0.20	0.38
E	0.220	0.310	5.59	7.87
E1	0.290	0.320	7.37	8.13
e	0.100		2.54	
L	0.125	0.200	3.18	5.08
L1	0.150	–	3.81	–
Q	0.015	0.070	0.38	1.78
S	–	0.098	–	2.49
S1	0.005	–	0.13	–

DIM	PINS	INCHES		MILLIMETERS	
		MIN	MAX	MIN	MAX
D	8	–	0.405	–	10.29
D	14	–	0.785	–	19.94
D	16	–	0.840	–	21.34
D	18	–	0.960	–	24.38
D	20	–	1.060	–	26.92
D	24	–	1.280	–	32.51

21-0045A

Maxim cannot assume responsibility for use of any circuitry other than circuitry entirely embodied in a Maxim product. No circuit patent licenses are implied. Maxim reserves the right to change the circuitry and specifications without notice at any time.

© 1996 Maxim Integrated Products Printed USA MAXIM is a registered trademark of Maxim Integrated Products.

This datasheet has been downloaded from:

www.DatasheetCatalog.com

Datasheets for electronic components.