NT68F62

8-Bit Microcontroller for Monitor (32K Flash MTP Type)

Features

- Operating voltage range: 4.5V to 5.5V
- CMOS technology for low power consumption
- 6502 8-bit CMOS CPU core
- 8 MHz operation frequency
- 32K bytes of flash memory for Multi -Times Program
- 512 bytes of RAM
- 2Kbytes Masked BootROM for ISP.
- One 8-bit base timer
- 13 channels of 8-bit PWM outputs with 5V open drain
- 4 channel A/D converters with 6-bit resolution
- 25 bi-directional I/O port pins (8 dedicated I/O pins)
- Hsync/Vsync signals processor for separate & composite signals, including hardware sync signals polarity detection and freq. counters with 2 sets of Hsync counting intervals
- Hsync/Vsync polarity controlled output, 5 selectable free run output signals and self-test patterns, auto-mute function, half freq. I/O function
- Two built-in IIC bus interfaces support VESA DDC1/2B+
- Two layers of interrupt management
  NMI interrupt sources
  - INTE0 (External INT with selectable edge trigger)
  - INTMUTE (Auto Mute Activated)

  IRQ interrupt sources
  - INTS0/1 (SCL Go-low INT)
  - INTA0/1 (Slave Address Matched INT)
  - INTTX0/1 (Shift Register INT)
  - INTRX0/1 (Shift Register INT)
  - INTNAK0/1 (No Acknowledge)
  - INTSTOP0/1 (Stop Condition Occurred INT)
  - INTE1 (External INT with Selectable Edge Trigger)
  - INTV (VSYNC INT)
  - INTMR (Base Timer INT)
  - INTADC (AD Conversion Done INT)
- Hardware watch-dog timer function
- 40-pin P-DIP and 42-pin S-DIP packages

General Description

The NT68F62 is a new generation of monitor µC for auto-sync and digital control applications. Particularly, this chip supports various functions to allow users to easily develop USB monitors. It contains the 6502 8-bit CPU core, 512 bytes of RAM for use as working RAM and as stack area, 32K bytes of Flash memory, 13-channels of 8-bit PWM D/A converters, 4-channel A/D converters for detection of keys which can save I/O pins, one 8-bit pre-loadable base timer, an internal Hsync and Vsync signals processor and a watch-dog timer, which prevents the system from abnormal operation and two IIC bus interfaces. The user can store EDID data in the 128 bytes of RAM for DDC1/2B, so that the user can reduce a dedicated EEPROM for EDID. The half frequency output function can save the external one-shot circuit. All of these designs are borne of our committment to offer our user savings on component costs. The 42 pin S-DIP IC provides two additional I/O pins – port40 & port41, Part number NT68F62U represents the S-DIP IC. For future reference, port40 & port42 are only available for the 42 pin S-DIP IC.

Pin Configurations

40-Pin P-DIP

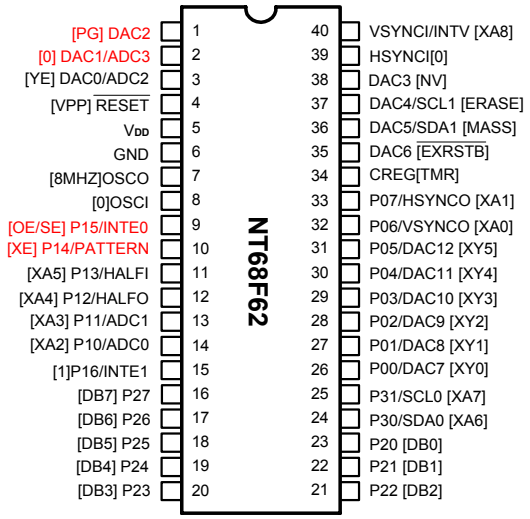

* [ ]: Flash Mode

42-Pin S-DIP

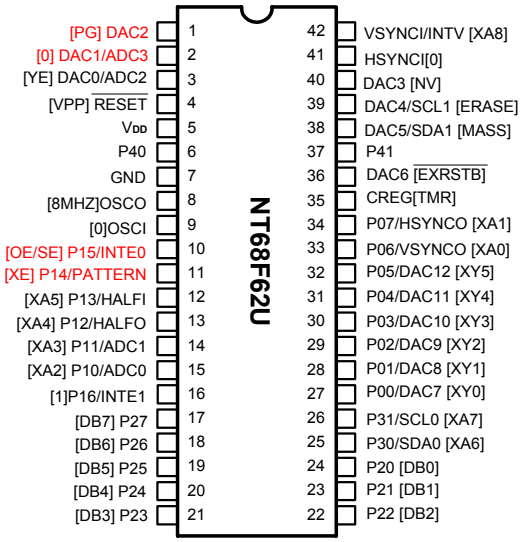

* [ ]: Flash Mode

Block Diagram

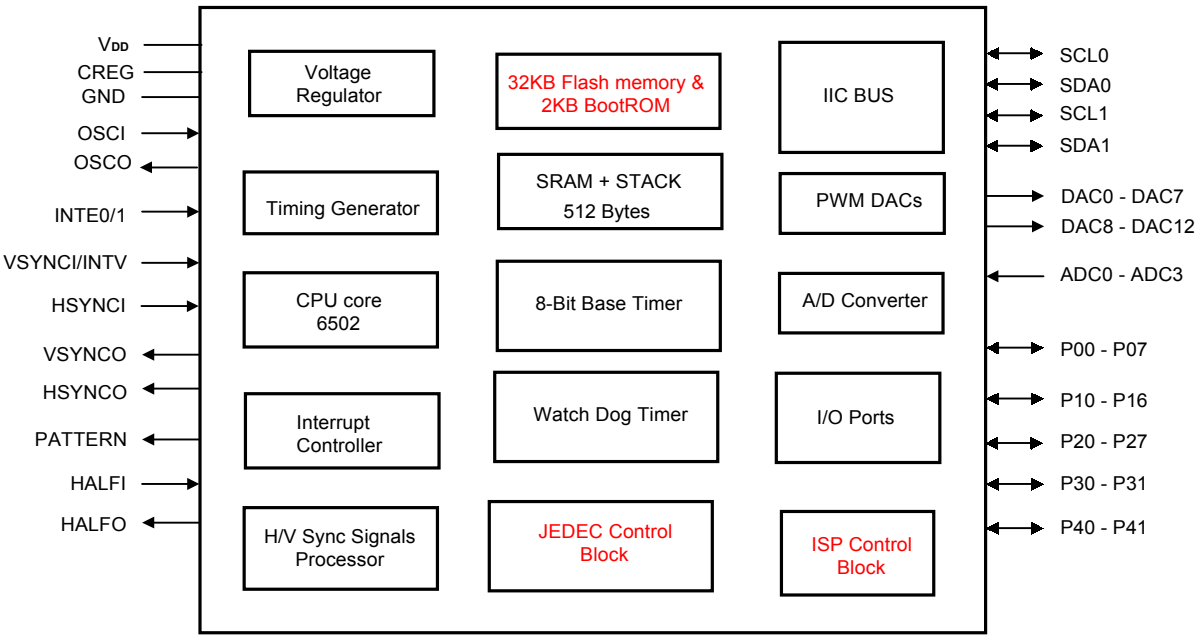

Pin Description

Pin No.		Designation	Reset Init.	I/O	Description
40 Pin	42 Pin				
1	1	DAC2		O	Open drain 5V, D/A converter output 2
2	2	DAC1/ADC3	DAC1	O	Open drain 5V, D/A converter output 1, shared with the A/D converter channel 3 input
3	3	DAC0/ADC2	DAC0	O	Open drain 5V, D/A converter output 0, shared with the A/D converter channel 2 input
4	4	$\overline{\text{RESET}}$		I	Schmitt Trigger input pin, low active reset with internal pulled down 50KΩ resistor *
5	5	V_{DD}		P	Power
6	7	GND		P	Ground
7	8	OSCO		O	Crystal OSC output
8	9	OSCI		I	Crystal OSC input
9	10	P15/INTE0		I/O	Bi-directional I/O pin with internal pulled up 22KΩ resistor, shared with input pin of external interrupt source0 (NMI), withSchmitt trigger, selectable triggered, and internal pulled up 22KΩ resistor
10	11	P14/PATTERN		I/O	Bi-directional I/O pin with internal pulled up 22KΩ resistor, shared with the output of the self test pattern
11	12	P13/HALFI	P13	I/O	Bi-directional I/O pin with internal pulled up 22KΩ resistor, shared with the half hsync input
12	13	P12/HALFO	P12	I/O	Bi-directional I/O pin with internal pulled up 22KΩ resistor, shared with the half hsync output
13	14	P11/ADC1	P11	I/O	Bi-directional I/O pin with internal pulled up 22KΩ resistor, shared with the A/D converter channel 1 input
14	15	P10/ADC0	P10	I/O	Bi-directional I/O pin with internal pulled up 22KΩ resistor, shared with the A/D converter channel 0 input
15	16	P16/INTE1	P16	I/O	Bi-directional I/O pin with internal pulled up 22KΩ resistor, shared with input pin of external interrupt source1, with Schmitt Trigger, selectable triggered, and an internal pulled up 22KΩ resistor

Pin Description (continued)

Pin No.		Designation	Reset Init.	I/O	Description
40 Pin	42 Pin				
16 - 23	17 - 24	P27 – P20		I/O	Bi-directional I/O pin, push-pull structure with high current drive/sink capability
24	25	P30/SDA0	P30	I/O	Open drain 5V bi-directional I/O pin P30, shared with the SDA0 pin of IIC bus Schmitt Trigger buffer
25	26	P31/SCL0	P31	I/O	Open drain 5V bi-directional I/O pin P31, shared with the SCL0 pin of IIC bus Schmitt Trigger buffer
26	27	P00/DAC7	P00	I/O	Bi-directional I/O pin with internal pulled up 22KΩ resistor, shared with open drain 5V D/A converter output 7
27	28	P01/DAC8	P01	I/O	Bi-directional I/O pin with internal pulled up 22KΩ resistor, shared with the open drain 5V D/A converter output 8
28	29	P02/DAC9	P02	I/O	Bi-directional I/O pin with internal pulled up 22KΩ resistor, shared with the open drain 5V D/A converter output 9
29	30	P03/DAC10	P03	I/O	Bi-directional I/O pin with internal pulled up 22KΩ resistor, shared with the open drain 5V D/A converter output 10
30	31	P04/DAC11	P04	I/O	Bi-directional I/O pin with internal pulled up 22KΩ resistor, shared with the open drain 5V D/A converter output 11
31	32	P05/DAC12	P05	I/O	Bi-directional I/O pin with internal pulled up 22KΩ resistor, shared with the open drain 5V D/A converter output 12
32	33	P06/VSYNCO	P06	I/O	Bi-directional I/O pin with internal pulled up 22KΩ resistor, shared with the vsync out
33	34	P07/HSYNCO	P07	I/O	Bi-directional I/O pin with internal pulled up 22KΩ resistor, shared with the hsync out
34	35	DAC7		O	Open drain 5V, D/A converter output 7
35	36	DAC6		O	Open drain 5V, D/A converter output 6
36	38	DAC5/SDA1	DAC5	O	Open drain 5V, D/A converter output 5, shared with open drain SDA1 line of IIC bus, Schmitt Trigger buffer

Pin Description (continued)

Pin No.		Designation	Reset Init.	I/O	Description
40 Pin	42 Pin				
37	39	DAC4/SCL1	DAC4	O	Open drain 5V, D/A converter output 4, shared with the open drain SCL1 line of IIC bus, Schmitt Trigger buffer
38	40	DAC3		O	Open drain 5V, D/A converter output 3
39	41	HSYNCI		I	Debouncing & Schmitt Trigger input pin for video horizontal sync signal, internal pull high, shared with the composite sync input
40	42	VSYNCI/INTV	VSYNCI	I	Debouncing & Schmitt trigger input pin for video vertical sync signal, internal pull high, shared with the input pin of the external interrupt source, intv, with Schmitt Trigger, selectable triggered and internal pulled up 22KΩ resistor
-	6	P40		I/O	Bi-directional I/O pin with internal pulled up 22KΩ resistor, only 42 pin S-DIP available
-	37	P41		I/O	Bi-directional I/O pin with internal pulled up 22KΩ resistor, only 42 pin S-DIP available

* This $\overline{\text{RESET}}$ pin must be pulled high by an external pulled-up resistor (5KΩ suggestion), or it will remain at low voltage to continually rest system.

Functional Description

1. 6502 CPU

The 6502 is an 8-bit CPU that provides 56 instructions, decimal and binary arithmetic, thirteen addressing modes, true indexing capability, programmable stack pointer and variable length stack, a wide selection of addressable memory ranges, and interrupt input options.
The CPU clock cycle is 4MHz (8MHz system clock divided by 2). Please refer to the 6502 data sheet for more detailed information.

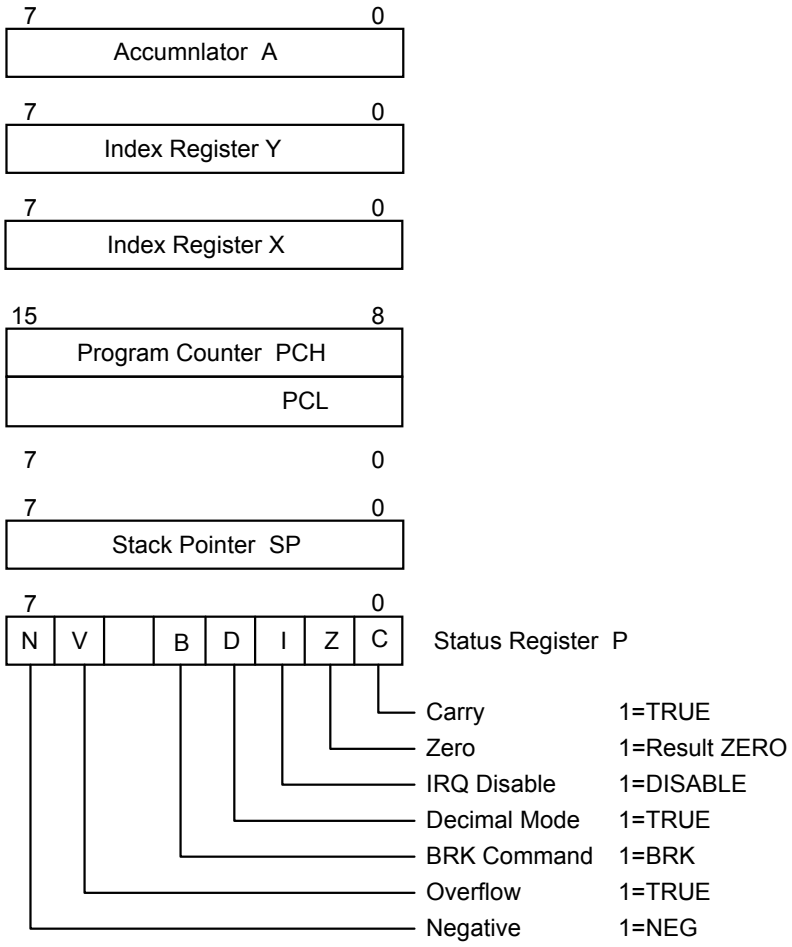

Figure 1.1. The 6502 CPU Registers and Status Flags

2. Instruction Set List

Instruction Code	Meaning	Operation
ADC	Add with carry	A + M + C → A, C
AND	Logical AND	A • M → A
ASL	Shift left one bit	C ← M7…M0 ← 0
BCC	Branch if carry clears	Branch on C = 0
BCS	Branch if carry sets	Branch on C = 1
BEQ	Branch if equal to zero	Branch on Z = 1
BIT	Bit test	A • M, M7→N, M6→V
BMI	Branch if minus	Branch on N = 1
BNE	Branch if not equal to zero	Branch on Z = 0
BPL	Branch if plus	Branch on N = 0
BRK	Break	Forced Interrupt PC+2 ↓ PC ↓
BVC	Branch if overflow clears	Branch on V = 0
BVS	Branch if overflow sets	Branch on V = 1
CLC	Clear carry	0 → C
CLD	Clear decimal mode	0 → D
CLI	Clear interrupt disable bit	0 → I
CLV	Clear overflow	0 → V
CMP	Compare Accumulator to memory	A − M
CPX	Compare with index register X	X − M
CPY	Compare with index register Y	Y − M
DEC	Decrement memory by one	M − 1 → M
DEX	Decrement index X by one	X − 1 → X
DEY	Decrement index Y by one	Y − 1 → Y
EOR	Logical exclusive-OR	A ⊕ M→A
INC	Increment memory by one	M + 1 → M
INX	Increment index X by one	X + 1 → X
INY	Increment index Y by one	Y + 1 → Y

Instruction Set List (continued)

Instruction Code	Meaning	Operation
JMP	Jump to new location	(PC+1)→ PCL, (PC+2)→ PCH
JSR	Jump to subroutine	PC+2 ↓ , (PC+1)→ PCL, (PC+2)→ PCH
LDA	Load accumulator with memory	M → A
LDX	Load index register X with memory	M → X
LDY	Load index register Y with memory	M → Y
LSR	Shift right one bit	0 → M7…M0 → C
NOP	No operation	No operation (2 cycles)
ORA	Logical OR	A + M → A
PHA	Push accumulator on stack	A ↓
PHP	Push status register on stack	P ↓
PLA	Pull accumulator from stack	A ↑
PLP	Pull status register from stack	P ↑
ROL	Rotate left through carry	C ← M7…M0 ← C
ROR	Rotate right through carry	C → M7…M0 → C
RTI	Return from interrupt	P ↑ , PC ↑
RTS	Return from subroutine	PC ↑ , PC+1 → PC
SBC	Subtract with borrow	A − M − C → A, C
SEC	Set carry	1 → C
SED	Set decimal mode	1 → D
SEI	Set interrupt disable status	1 → I
STA	Store accumulator in memory	A → M
STX	Store index register X in memory	X → M
STY	Store index register Y in memory	Y → M
TAX	Transfer accumulator to index X	A → X
TAY	Transfer accumulator to index Y	A → Y
TSX	Transfer stack pointer to index X	S → X
TXA	Transfer index X to accumulator	X → A
TXS	Transfer index X to stack pointer	X → S
TYA	Transfer index Y to accumulator	Y → A

* Refer to 6502 programming data book for more details.

3. RAM: 512 X 8 bits

The built-in 512 X 8-bit SRAM is used for data memory and stack area. The RAM addressing range is from $0080 to $027F. The contents of RAM are undetermined at power-up and are not affected by system reset. Software programmers can allocate stack area in the RAM by setting stack pointer register (S). Since the 6502 default stack pointer is $01FF, programmers must set S register to FFH when starting the program.

```
as;     LDX    #$FF
        TXS
```

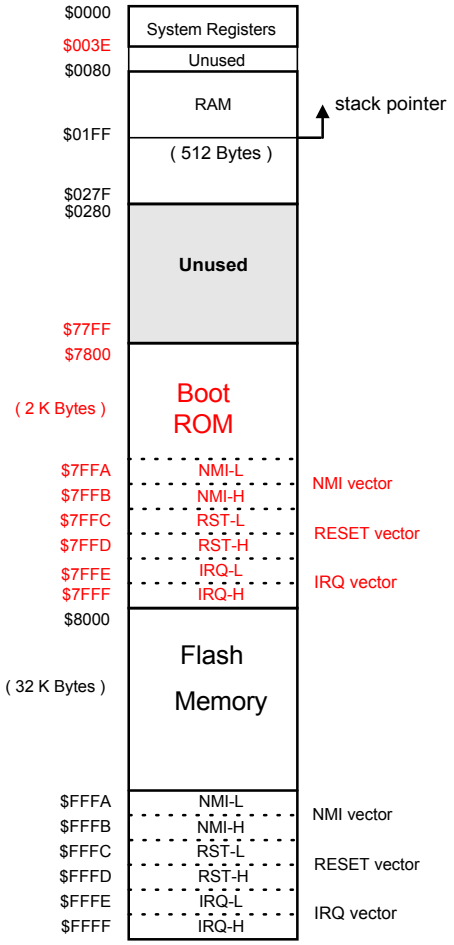

4.1. BootROM: 2K X 8 bits

NT68F62 Provides 2K bytes of Boot-ROM for ISP. The memory space is from $7800 to $7FFF. The addresses, from $7FFA to $7FFF, are reserved for the 6502 CPU vector.

4.2. Flash memory: 32K X 8 bits

NT68F62 provides 32K flash memory space for programming. The flash memory space is located from $8000 to $FFFF. The addresses, from $FFFA to $FFFF, are reserved for the 6502 CPU vectors, thus users must arrange them by themselves. This flash memory can be progammed repeatly at limited times to guarantee its performance.

5. System Registers

Addr.	Register	INIT	Bit7	Bit6	Bit5	Bit4	Bit3	Bit2	Bit1	Bit0	R/W
Control Registers for I/O Port0 & Port1											
$0000	PT0	FFH	P07	P06	P05	P04	P03	P02	P01	P00	RW
$0001	PT1	7FH	—	P16	P15	P14	P13	P12	P11	P10	RW
Control Register to Control Port2 I/O Direction											
$0002	PT2DIR	FFH	$\overline{\text{P27OE}}$	$\overline{\text{P26OE}}$	$\overline{\text{P25OE}}$	$\overline{\text{P24OE}}$	$\overline{\text{P23OE}}$	$\overline{\text{P22OE}}$	$\overline{\text{P21OE}}$	$\overline{\text{P20OE}}$	W
Control Registers for I/O Port2 - 4											
$0003	PT2	FFH	P27	P26	P25	P24	P23	P22	P21	P20	RW
$0004	PT3	03H	—	—	—	—	—	—	P31	P30	RW
$0005	PT4	03H	Only available for the 42 Pin SDIP version					—	P41	P40	RW
Control Registers for Synprocessor											
$0006	SYNCON	FFH	—	—	—	—	$\overline{\text{INSEN}}$	—	$\overline{\text{HSEL}}$	S/$\overline{\text{C}}$	R
		FFH	—	—	—	—	$\overline{\text{INSEN}}$	$\overline{\text{ENHSEL}}$	$\overline{\text{HSEL}}$	S/$\overline{\text{C}}$	W
$0007	HV CON	FFH	—	—	HSYNCI	VSYNCI	HPOLI	VPOLI	HPOLO	VPOLO	R
		FFH	$\overline{\text{ENHOUT}}$	$\overline{\text{ENHOUT}}$	—	—	—	—	HPOLO	VPOLO	W
$0008	HCNT L	00H	HCL7	HCL6	HCL5	HCL4	HCL3	HCL2	HCL1	HCL0	R
$0009	HCNT H	00H	HCNTOV	—	—	—	HCH3	HCH2	HCH1	HCH0	R
			CLRHOV	—	—	—	—	—	—	—	W
$000A	VCNT L	00H	VCL7	VCL6	VCL5	VCL4	VCL3	VCL2	VCL1	VCL0	R
$000B	VCNT H	00H	VCNTOV	—	VCH5	VCH4	VCH3	VCH2	VCH1	VCH0	R
			CLRVOV	—	—	—	—	—	—	—	W
$000C	FREECON	FFH	$\overline{\text{ENPAT}}$	$\overline{\text{PAT1}}$	—	—	—	$\overline{\text{FREQ2}}$	$\overline{\text{FREQ1}}$	$\overline{\text{FREQ0}}$	W
$000D	HALFCON	FFH	$\overline{\text{ENHALF}}$	$\overline{\text{NOHALF}}$	$\overline{\text{HALFPOL}}$	—	—	—	—	—	W
$000E	AUTOMUTE	FFH	$\overline{\text{ENHDIFF}}$	$\overline{\text{ENPOL}}$	$\overline{\text{ENOVER}}$	—	HDIFFVL3	HDIFFVL2	HDIFFVL1	HDIFFVL0	W
Control Registers to Enable PWM 8 - 15 Channels											
$000F	ENDAC	FFH	—	—	$\overline{\text{ENDK12}}$	$\overline{\text{ENDK11}}$	$\overline{\text{ENDK10}}$	$\overline{\text{ENDK9}}$	$\overline{\text{ENDK8}}$	$\overline{\text{ENDK7}}$	W
Control Registers for ADC 0 - 3 Channels											
$0010	ENADC	FFH	$\overline{\text{CSTA}}$	—	—	—	$\overline{\text{ENADC3}}$	$\overline{\text{ENADC2}}$	$\overline{\text{ENADC1}}$	$\overline{\text{ENADC0}}$	W
$0011	AD0 REG	C0H	—	—	AD05	AD04	AD03	AD02	AD01	AD00	R
$0012	AD1 REG	00H	—	—	AD15	AD14	AD13	AD12	AD11	AD10	R
$0013	AD2 REG	00H	—	—	AD25	AD24	AD23	AD22	AD21	AD20	R
$0014	AD3 REG	00H	—	—	AD35	AD34	AD33	AD32	AD31	AD30	R

System Registers (continued)

Addr.	Register	INIT	Bit7	Bit6	Bit5	Bit4	Bit3	Bit2	Bit1	Bit0	R/W
Control Register for Polling (Read) Interrupt Groups & Clearing (Write) INTE0 & INTMUTE Interrupt Requests											
$0016	NMIPOLL	00H	—	—	—	—	—	—	INTE0	INTMUTE	R
			—	—	—	—	—	—	CLRE0	CLRMUTE	W
$0017	IRQPOLL	00H	—	—	—	—	—	IRQ2	IRQ1	IRQ0	R
Control Registers of Interrupt Enable											
$0018	IENMI	00H	—	—	—	—	—	—	INTE0	INTMUTE	RW
$0019	IEIRQ0	00H	—	—	INTS0	INTA0	INTTX0	INTRX0	INTNAK0	INTSTOP0	RW
$001A	IEIRQ1	00H	—	—	INTS1	INTA1	INTTX1	INTRX1	INTNAK1	INTSTOP1	RW
$001B	IEIRQ2	00H	—	—	—	—	INTADC	INTV	INTE1	INTMR	RW
Control Registers for Polling (Read) & Clearing (Write) Interrupt Requests											
$001C	IRQ0	00H	—	—	INTS0	INTA0	INTTX0	INTRX0	INTNAK0	INTSTOP0	R
			—	—	CLRS0	CLRA0	CLRTX0	CLRRX0	CLRNAK0	CLRSTOP0	W
$001D	IRQ1	00H	—	—	INTS1	INTA1	INTTX1	INTRX1	INTNAK1	INTSTOP1	R
			—	—	CLRS1	CLRA1	CLRTX1	CLRRX1	CLRNAK1	CLRSTOP1	W
$001E	IRQ2	00H	—	—	—	—	INTADC	INTV	INTE1	INTMR	R
			—	—	—	—	CLRADC	CLRV	CLRE1	CLRMR	W
Selection of Edge Triggered for INTV, INTE0 & 1 Interrupts											
$001F	TRIGGER	FFH	—	—	—	—	—	INTVR	INTE1R	INTE0R	R/W
Control Registers for Clearing Watch Dog Timer											
$0020	CLR WDT	—	0	1	0	1	0	1	0	1	W
Control Register for DDC1/2B+ of Channel 0											
$0021	CH0ADDR	A0H	ADR7	ADR6	ADR5	ADR4	ADR3	ADR2	ADR1	—	W
$0022	CH0TXDAT	00H	TX7	TX6	TX5	TX4	TX3	TX2	TX1	TX0	W
$0023	CH0RXDAT	00H	RX7	RX6	RX5	RX4	RX3	RX2	RX1	RX0	R
$0024	CH0CON	E0H	$\overline{\text{ENDDC}}$	MD1/ $\overline{2}$	—	START	STOP	—	$\overline{\text{TXACK}}$	—	W
			—	—	$\overline{\text{SRW}}$	START	STOP	—	—	—	R
$0025	CH0CLK	FFH	$\overline{\text{MODE}}$	$\overline{\text{MRW}}$	$\overline{\text{RSTART}}$	—	—	DDC2BR2	DDC2BR1	DDC2BR0	W
Control Register for DDC1/2B+ of Channel 1											
$0026	CH1ADDR	A0H	ADR7	ADR6	ADR5	ADR4	ADR3	ADR2	ADR1	—	W
$0027	CH1TXDAT	00H	TX7	TX6	TX5	TX4	TX3	TX2	TX1	TX0	W
$0028	CH1RXDAT	00H	RX7	RX6	RX5	RX4	RX3	RX2	RX1	RX0	R

System Registers (continued)

Addr.	Register	INIT	Bit7	Bit6	Bit5	Bit4	Bit3	Bit2	Bit1	Bit0	R/W
$0029	CH1CON	E0H	$\overline{\text{ENDDC}}$	MD1/ $\overline{2}$	—	START	STOP	—	$\overline{\text{TXACK}}$	—	W
			—	—	$\overline{\text{SRW}}$	START	STOP	—	—	—	R
$002A	CH1CLK	FFH	$\overline{\text{MODE}}$	$\overline{\text{MRW}}$	$\overline{\text{RSTART}}$	—	—	DDC2BR2	DDC2BR1	DDC2BR0	W
Control Registers for Base Timer											
$002E	BT	00H	BT7	BT6	BT5	BT4	BT3	BT2	BT1	BT0	W
$002F	BTCON	03H	—	—	—	—	—	—	$\overline{\text{BTCLK}}$	$\overline{\text{ENBT}}$	W
Control Registers for PWM Channel 0 - 13											
$0030	DACH0	80H	DKVL7	DKVL6	DKVL5	DKVL4	DKVL3	DKVL2	DKVL1	DKVL0	RW
$0031	DACH1	80H	DKVL7	DKVL6	DKVL5	DKVL4	DKVL3	DKVL2	DKVL1	DKVL0	RW
$0032	DACH2	80H	DKVL7	DKVL6	DKVL5	DKVL4	DKVL3	DKVL2	DKVL1	DKVL0	RW
$0033	DACH3	80H	DKVL7	DKVL6	DKVL5	DKVL4	DKVL3	DKVL2	DKVL1	DKVL0	RW
$0034	DACH4	80H	DKVL7	DKVL6	DKVL5	DKVL4	DKVL3	DKVL2	DKVL1	DKVL0	RW
$0035	DACH5	80H	DKVL7	DKVL6	DKVL5	DKVL4	DKVL3	DKVL2	DKVL1	DKVL0	RW
$0036	DACH6	80H	DKVL7	DKVL6	DKVL5	DKVL4	DKVL3	DKVL2	DKVL1	DKVL0	RW
$0037		—	—	—	—	—	—	—	—	—	
$0038	DACH7	80H	DKVL7	DKVL6	DKVL5	DKVL4	DKVL3	DKVL2	DKVL1	DKVL0	RW
$0039	DACH8	80H	DKVL7	DKVL6	DKVL5	DKVL4	DKVL3	DKVL2	DKVL1	DKVL0	RW
$003A	DACH9	80H	DKVL7	DKVL6	DKVL5	DKVL4	DKVL3	DKVL2	DKVL1	DKVL0	RW
$003B	DACH10	80H	DKVL7	DKVL6	DKVL5	DKVL4	DKVL3	DKVL2	DKVL1	DKVL0	RW
$003C	DACH11	80H	DKVL7	DKVL6	DKVL5	DKVL4	DKVL3	DKVL2	DKVL1	DKVL0	RW
$003D	DACH12	80H	DKVL7	DKVL6	DKVL5	DKVL4	DKVL3	DKVL2	DKVL1	DKVL0	RW
$003E	ISP REG	00H 03H						ISP	DDC1_ISP CH1_A0	DDC0_ISP CH0_A0	R W

6. Timing Generator

This block generates the system timing and control signals to be supplied to the CPU and on-chip peripherals. A crystal quartz, ceramic resonator, or an external clock signal which will be provided to the OSCI pin generates system timing. It generates 8MHz for the system clock and 4MHz for the CPU. Although internal circuits have a feedback resistor and compacitor included, users can externally add these components for proper operating.
The typical clock frequency is 8MHz. Different frequencies will affect the operation of those on-chip peripherals whose operating frequency is based on the system clock.

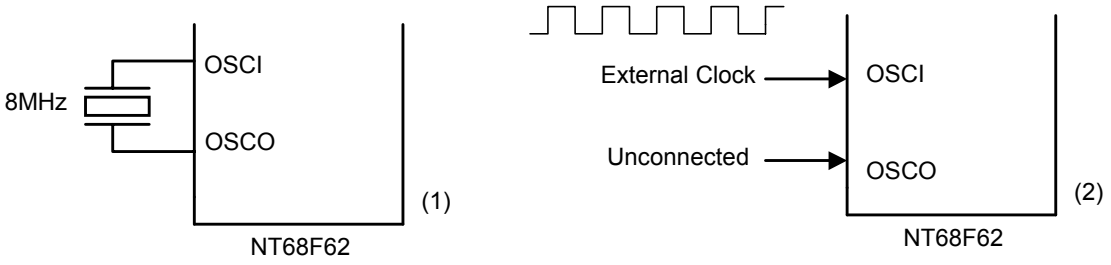

Figure 6.1. Oscillator Connections

7. RESET

The NT68F62 can be reset by the external reset pin or by the internal watch-dog timer. This is used to reset or start the microcontroller from a POWER DOWN condition. During the time that this reset pin is held LOW (*reset line must be held LOW for at least two CPU clock cycles), writing to or from the μC is inhibited. When a positive edge is detected on the RESET input, the μC will immediately begin the reset sequence.
After a system initialization time of six CPU clock cycles, the mask interrupt flag will be set and the μC will load the program counter from the memory vector locations $FFFC and $FFFD. This is the start location for program control.
An internal Schmitt Trigger buffer at the $\overline{\text{RESET}}$ pin is provided to improve noise immunity.

The reset status is as follows:

1. PORT0、PORT1、PORT2、PORT3 (& PORT4) pins will act as I/O ports with HIGH output
2. Sync processor counters reset and VCNT | HCNT latches cleared
3. All sync outputs are disabled
4. Base timer is disabled and cleared
5. Various Interrupt sources are disabled and cleared
6. A/D converter is disabled and stopped
7. DDC1/2B+ function is disabled
8. PWM DAC0 – DAC6 output 50% duty waveform and DAC7 - DAC12 is disabled
9. Watch-dog timer is cleared and enabled

8. A/D Converters

The structure of these analog to digital converters is 6-bit successive approximation. Analog voltage is supplied from external sources to the A/D input pins and the result of the conversion is stored in the 6-bit data latch registers ($0011 & $0014). The A/D channels are activated by clearing the correspondent control bits in the ENADC control register. When users write '0' into one of the enabled control bits, its correspondent I/O pin or DAC will be switched to the A/D converter input pin (ADC0 & ADC1 are shared with PORT10 & PORT 11; ADC2 & ADC3 are shared with DAC0 & DAC1). Conversion will be started by clearing the $\overline{\text{CSTA}}$ bit (CONVERSION START) in the ENADC control register. When the conversion is finished, the system will set this INTADC bit. Users can monitor this bit to get the valid A/D conversion data in the AD latch registers ($0011 - $0014). Users can also open the interrupt sources to remind users to get the stable digital data. Notice that only at the activated A/D channel, its latched data are available.

The analog voltage to be measured should be stable during the conversion operation and the variation must not exceed LSB for the best accuracy in measurement.

Addr.	Register	INIT	Bit7	Bit6	Bit5	Bit4	Bit3	Bit2	Bit1	Bit0	R/W
$0010	ENADC	FFH	$\overline{\text{CSTA}}$	—	—	—	$\overline{\text{ENADC3}}$	$\overline{\text{ENADC2}}$	$\overline{\text{ENADC1}}$	$\overline{\text{ENADC0}}$	W
$0011	AD0 REG	C0H	—	—	AD05	AD04	AD03	AD02	AD01	AD00	R
$0012	AD1 REG	00H	—	—	AD15	AD14	AD13	AD12	AD11	AD10	R
$0013	AD2 REG	00H	—	—	AD25	AD24	AD23	AD22	AD21	AD20	R
$0014	AD3 REG	00H	—	—	AD35	AD34	AD33	AD32	AD31	AD30	R
$001B	IEIRQ2	00H	—	—	—	—	INTADC	INTV	INTE1	INTMR	R/W
$001E	IRQ2	00H	—	—	—	—	INTADC	INTV	INTE1	INTMR	R
			—	—	—	—	CLRADC	CLRV	CLRE1	CLRMR	W

Reference ADC Table (V_{DD} = 5.0V)

15	1.50V	1C	2.06V	23	2.59V	2A	3.14V
16	1.58V	1D	2.12V	24	2.67V	2B	3.22V
17	1.66V	1E	2.20V	25	2.75V	2C	3.30V
18	1.74V	1F	2.28V	26	2.82V	2D	3.38V
19	1.82V	20	2.35V	27	2.91V	2E	3.46V
1A	1.90V	21	2.44V	28	2.98V	2F	3.54V
1B	1.98V	22	2.51V	29	3.07V	30	3.62V

Note: It is strongly recommended that the ADC's input signal should be allocated within the ADC's linear voltage range (1.5V~3.5V) to obtain a stable digital value. Do not use the outer ranges (0V~1.4V & 3.6V~5.0V) in which the converted digital value is not guaranteed.

9. PWM DACs (Pulse Width Modulation D/A Converters)

There are 13 PWM D/A converters with 8-bit resolution in the NT68F62. All of these D/A (DAC0 - DAC12) converters are of open-drain output structure with an external 5V applied maximum. DAC0 – DAC6 are dedicated PWM channels, and DAC7 - DAC12 are shared with the I/O pins. These shared PWM channels are activated by clearing the correspondent control bits in the ENDAC control register ($000F). When users write '0' into one of the enable control bits, its correspondent I/O pin will be switched to a PWM output pin.

The PWM refresh rate is 62.5KHz operating on an 8MHz system clock. There are 13 readable DACH registers corresponding to 13 PWM channels ($0030 - $003D). Each PWM output pulse width is programmable by setting the 8 bit digital to the corresponding DACH registers. When these DACH registers are set to 00H, the DAC will output LOW (GND level) and every 1 bit addition will add 62.5ns pulse width. After reset, all DAC outputs are set to 80H (1/2 duty output). (Please refer to Figure 9.1 for the detailed timing diagram of the PWM D/A output.)

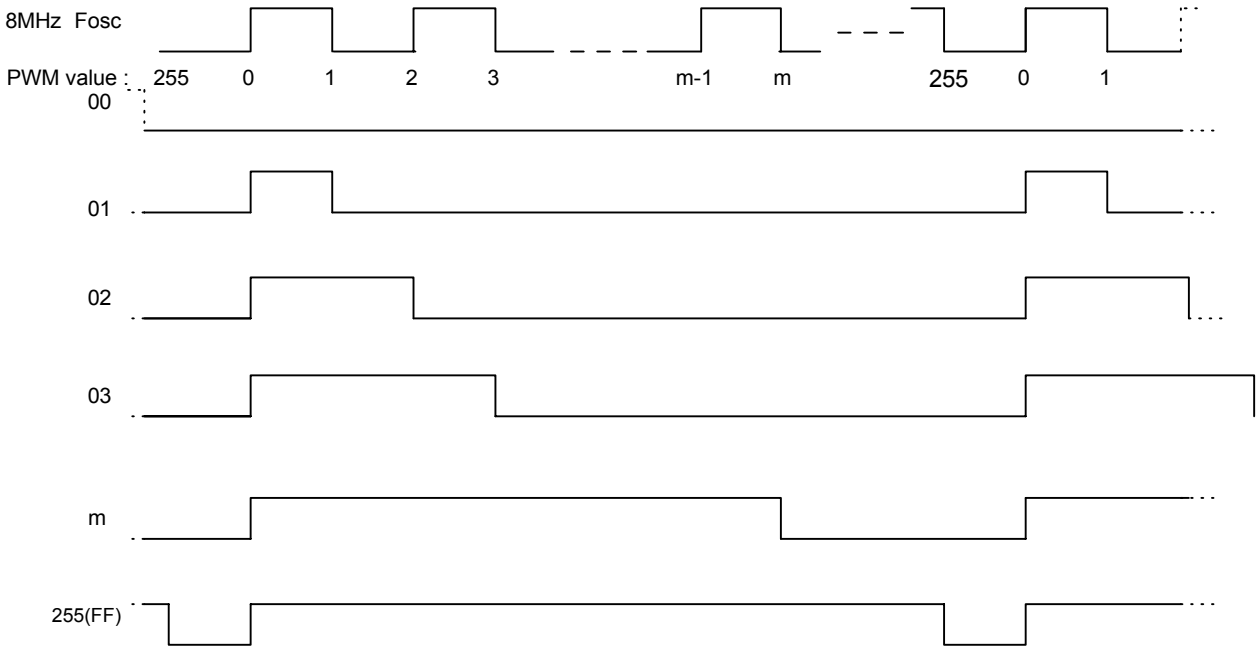

Figure 9.1. The DAC Output Timing Diagram and Wave Table

PWM DACs (continued)

DAC0 & DAC1 are shared with the ADC2 & ADC3 input pins respectively. If ENADC2/$\overline{3}$ bit in the ENADC control register is cleared to LOW, the A/D converters will activate simultaneously. After the chip is reset, ENADC2/$\overline{3}$ bits will be in HIGH state and DAC0 & DAC1 will act as PWM output pins.

DAC4 & DAC5 are shared with SCL1 & SDA1 I/O pins respectively. If users clear the $\overline{\text{ENDDC}}$ bit in the CH1CON control register to LOW, channel 1 of the DDC will be activated. When used as the DDC channel, the I/O port will be of an open drain structure and include a 'Schmitt Trigger' buffer for noise immunity. After the chip is reset, $\overline{\text{ENDDC}}$ bits will be in HIGH state and DAC4 - DAC5 will act as PWM output pins.

Addr.	Register	INIT	Bit7	Bit6	Bit5	Bit4	Bit3	Bit2	Bit1	Bit0	R/W
$000F	ENDAC	FFH	—	—	$\overline{\text{ENDK12}}$	$\overline{\text{ENDK11}}$	$\overline{\text{ENDK10}}$	$\overline{\text{ENDK9}}$	$\overline{\text{ENDK8}}$	$\overline{\text{ENDK7}}$	W
$0010	ENADC	FFH	$\overline{\text{CSTA}}$	—	—	—	$\overline{\text{ENADC3}}$	$\overline{\text{ENADC2}}$	$\overline{\text{ENADC1}}$	$\overline{\text{ENADC0}}$	W
$0030	DACH0	80H	DKVL7	DKVL6	DKVL5	DKVL4	DKVL3	DKVL2	DKVL1	DKVL0	RW
$0031	DACH1	80H	DKVL7	DKVL6	DKVL5	DKVL4	DKVL3	DKVL2	DKVL1	DKVL0	RW
$0032	DACH2	80H	DKVL7	DKVL6	DKVL5	DKVL4	DKVL3	DKVL2	DKVL1	DKVL0	RW
$0033	DACH3	80H	DKVL7	DKVL6	DKVL5	DKVL4	DKVL3	DKVL2	DKVL1	DKVL0	RW
$0034	DACH4	80H	DKVL7	DKVL6	DKVL5	DKVL4	DKVL3	DKVL2	DKVL1	DKVL0	RW
$0035	DACH5	80H	DKVL7	DKVL6	DKVL5	DKVL4	DKVL3	DKVL2	DKVL1	DKVL0	RW
$0036	DACH6	80H	DKVL7	DKVL6	DKVL5	DKVL4	DKVL3	DKVL2	DKVL1	DKVL0	RW
$0037		—	—	—	—	—	—	—	—	—	
$0038	DACH7	80H	DKVL7	DKVL6	DKVL5	DKVL4	DKVL3	DKVL2	DKVL1	DKVL0	RW
$0039	DACH8	80H	DKVL7	DKVL6	DKVL5	DKVL4	DKVL3	DKVL2	DKVL1	DKVL0	RW
$003A	DACH9	80H	DKVL7	DKVL6	DKVL5	DKVL4	DKVL3	DKVL2	DKVL1	DKVL0	RW
$003B	DACH10	80H	DKVL7	DKVL6	DKVL5	DKVL4	DKVL3	DKVL2	DKVL1	DKVL0	RW
$003C	DACH11	80H	DKVL7	DKVL6	DKVL5	DKVL4	DKVL3	DKVL2	DKVL1	DKVL0	RW
$003D	DACH12	80H	DKVL7	DKVL6	DKVL5	DKVL4	DKVL3	DKVL2	DKVL1	DKVL0	RW

DAC control register ($000F) and DAC value register ($0030 - $003D)

10. Watch-Dog Timer (WDT)

The NT68F62 implements a watch-dog timer reset to avoid system stop or malfunction. The clock of the WDT is taken from the on-chip RC oscillator, which does not require any external components. Thus, the WDT will run, even if the clock on the OSCI/OSCO pins of the device has been stopped. The WDT time interval is about 0.5 second. The WDT must be cleared within every 0.5 second when the software is in normal sequence, otherwise the WDT will overflow and cause a reset. The WDT is cleared and enabled after the system is reset, and can not be disabled by the software. Users can clear the WDT by writing 55H to the CLRWDT register ($0020).

```
as;     LDA    #$55
        STA    $0020
```

Addr.	Register	INIT	Bit7	Bit6	Bit5	Bit4	Bit3	Bit2	Bit1	Bit0	R/W
$0020	CLR WDT	-	0	1	0	1	0	1	0	1	W

11. Interrupt Controller

The system provides two kinds of interrupt sources: NMI & IRQ. The NMI cannot be masked if user enabled this NMI interrupt. Users will execute the NMI interrupt vector any time that sources are activated. The IRQ interrupts can be masked by executing a CLI instruction or by setting the interrupt mask flag directly in the μC status register. In the process of an IRQ interrupt, if the interrupt mask flag is not set, the μC will begin an interrupt sequence. The program counter and processor status register will be stored in the stack. The μC will then set the interrupt mask flag high so that no further interrupts may occur. At the end of this cycle, the program counter will be loaded from addresses $FFFE & $FFFF, thus transferring program control to the memory vector located at these addresses. For NMI interrupt, μC will transfer execution sequence to the memory vector located at addresses $FFFA & $FFFB.

When manipulating various interrupt sources, NT68F62 divides them into two groups for accessing them easily. One is the NMI group and the other is the IRQ group.

- The NMI group includes INTE0, INTMUTE.
- The IRQ group includes the subgroup of IRQ0, IRQ1,RQ2:
  - IRQ0: DDC1/2B+ Channel 0 interrupt sources; It includes INTS0, INTA0, INTTX0, INTRX0, INTNAK0 and INTSTOP0 interrupts.
  - IRQ1: DDC1/2B+ Channel 1 interrupt sources; It includes INTS0, INTA1, INTTX1, INTRX1, INTNAK1 and INTSTOP1.
  - IRQ2: It includes INTADC, INTV, INTE1 and INTMR interrupt sources.

Below are the interrupt sources.

Nonmaskable Interrupt Group:

Interrupt	Meaning	Action
INTE0 INT	External 0 INT	It will be activated by the rising or falling edge of the external interrupt pulse. The triggered edge can be selected by EDGE0 bit.
INTMUTE	Auto Mute	It will be activated when the mute condition occurs (Hsync frequency change). Please refer the synprocessor section for a more detailed explanation.

Maskable Interrupt Group:

Interrupt	Meaning	Action
INTADC	A/D Conversion Done	User activates the ADC by clearing the $\overline{\text{CSTART}}$ bit. When the AD conversion is done, this bit will be set.
INTV INT	Vsync INT	It will be activated by the rising edge of every vsync pulse.
INTE1 INT	External 1 INT	It will be activated by the rising or falling edge of the external interrupt pulse. The triggered edge can be selected by EDGE1 bit.
INTMR INT	Timer INT	It will be activated by the rising edge of every ??? when the Base Timer counter overflows and counting from $FF to $00.

DDC Channel 0/1 Maskable Interrupt Sources:

Interrupt	Meaning	Action
INTS INT	SCL Go-Low INT	In DDC1 mode, it will be activated when the external device proceed a DDC2 communication. This action includes pulling the SCL line to ground or sending out a 'START' condition directly. The system will respond to this action by changing DDC1 mode to DDC2 slave mode.
INTA INT	Address Matched INT	It will be activated in DDC2 slave mode when the external device calls a NT68F62 slave address. If this calling address matches the NT68F62 address, the system will generate this interrupt to remind the user
INTTX INT	Transfer Buffer Empty INT	It will be activated in DDC2 mode when the transmission buffer, IIC_TXDAT, is empty in transmission mode.
INTRX INT	Receiving Buffer Overflow INT	It will be activated in DDC2 mode when the new data are stored in the IIC_RXDAT register in receive mode.
INTNAK INT	No Acknowledge INT	In transmission mode, this interrupt will be activated when the NT68F62 has send out one byte of data but the external device does not respond with an acknowledgement bit to it.
INTSTOP INT	DDC2 Stop INT	In SLAVE mode, this interrupt will be activated when the NT68F62 receives a 'STOP' condition.

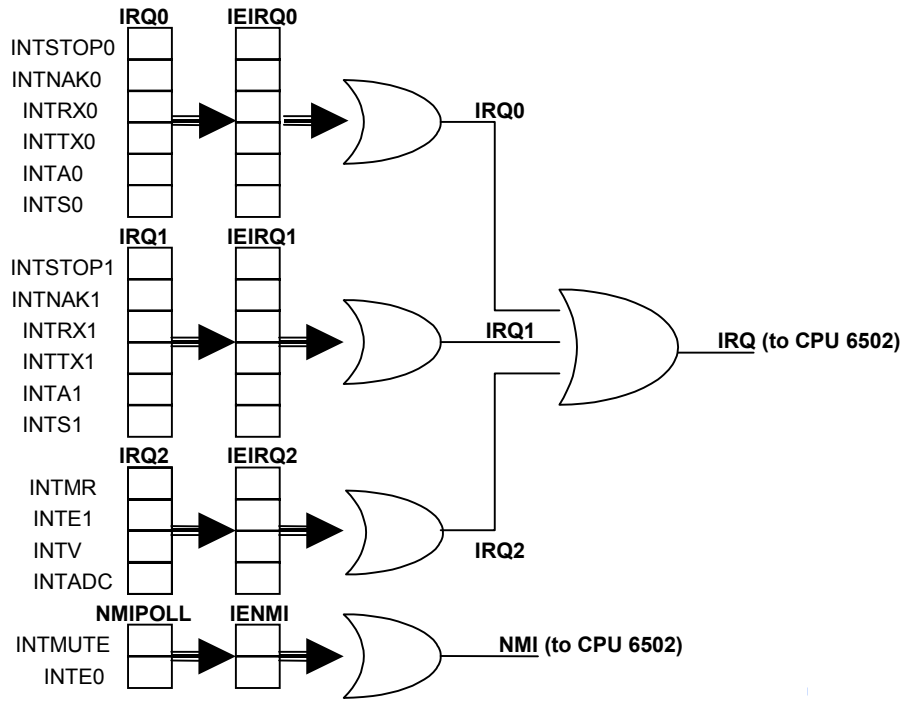

Figure 11.1. Interrupt Controller Structure

Enabling Interrupts: The system will disable all of these interrupts after reset. Users can enable each of the interrupts by setting the interrupt enable bits at the IENMI, IEIRQ0 ~ IEIRQ2 control registers. For example, if users want to enable the external interrupt 0 (INTE0), write '1' to the INTE0 bit in the IENMI control register. At the INTE0 pin, whenever NT68F62 detects an interrupt message, it will generate an interrupt sequence to fetch the NMI vector. Because these IEX control registers can be read, users can read back what interrupts he has activated. At polling sequence, users need not poll those unactivated interrupts.

Requesting Interrupts be set : No matter whether the user has set the interrupt enable bits or not, if the interrupt triggered condition is matched, the system will set the correspondent bits in the IRQ0 ~ IRQ3 control registers or in the NMIPOLL control register (INTE0 & INTMUTE bits). For example, if at the VSYNCI pin, the system detects a pulse occurring, the system will set the INTV bit in the IRQ2 control register.

Interrupt Groups: The system divides the IRQ interrupt sources into several groups, ex IRQ0, IRQ1, and IRQ2. In each of these groups, if its membership in one of the interrupt groups has been activated, its group bit in the IRQPOLL control register will be set. For example, if the INTS0 of the first DDC1/2B+ channel is activated, the INTS0 bit in the IRQ0 control register will be set and the IRQ0 bit in the IRQPOLL control register will also be set. Notice that the IRQ0 bit in the IRQPOLL control register will be cleared by the system when all of its interrupt sources, INTS0, INTA0, INTTX0, INTRX0, INTNAK0 and INTSTOP0 have been cleared by the user or the system. The NMI group follows the same procedure as the IRQ groups.

Polling Interrupts: When an NMI interrupt occurs, during the NMI interrupt service routine, users must poll the INTE0 & INTMUTE bit in the NMIPOLL control register to confirm the NMI interrupt source. The polling sequence decides the priority of the NMI interrupt acceptance. When an IRQ interrupt occurrs, during the IRQ interrupt service routine, users must poll the IRQ0 – IRQ2 in the IRQPOLL control register to confirm the IRQ interrupt source. In the same way, the polling sequence decides the priority of the IRQ interrupt acceptance. When deciding the IRQ source, users can further confirm the real interrupt source by polling the Correspondent IRQX control register ($001C - $001E).

Clearing the Interrupt Request bit: When an interrupt occurrs, the CPU will jump to the address defined by the interrupt vector to execute the interrupt service routine. Users can check which one of the interrupt sources is activated and operating a task. Upon entering the interrupt service routine, the request bit that caused the interrupt must be cleared by the user before finishing the service routine and returning to the normal instruction sequence. If users forget to clear this request bit, after returning to the main program, it will interrupt CPU again because the request bit remains activated. Simply, users just need to write '1' to the polling bits in the NMIPOLL & IRQX registers ($0016 & $001C - $001E) to clear those completed interrupt sources.

Selecting interrupt trigger edge: INTVR, INTE0R & INTE1R interrupt sources are the edge triggered type of interrupts. The system allows the selection of rising or falling edge triggers to be used under the user's control. After reset, the rising edge triggers are provided and the content is 'FF' in the TRIGGER control register ($001F). The user just clears the control bits in this TRIGGER register and switches these interrupts to be falling edge triggered.

Control Bit Description

Addr.	Register	INIT	Bit7	Bit6	Bit5	Bit4	Bit3	Bit2	Bit1	Bit0	R/W
Control Register for Polling Interrupt											
$0016	NMIPOLL	00H	—	—	—	—	—	—	INTE0	INTMUTE	R
			—	—	—	—	—	—	CLRE0	CLRMUTE	W
$0017	IRQPOLL	00H	—	—	—	—	—	IRQ2	IRQ1	IRQ0	R
Control Registers of Interrupt Enable											
$0018	IENMI	00H	—	—	—	—	—	—	INTE0	INTMUTE	RW
$0019	IEIRQ0	00H	—	—	INTS0	INTA0	INTTX0	INTRX0	INTNAK0	INTSTOP0	RW
$001A	IEIRQ1	00H	—	—	INTS1	INTA1	INTTX1	INTRX1	INTNAK1	INTSTOP1	RW
$001B	IEIRQ2	00H	—	—	—	—	INTADC	INTV	INTE1	INTMR	RW
Control Registers for Polling (Read) & Clearing (Write) Interrupt Requests											
$001C	IRQ0	00H	—	—	INTS0	INTA0	INTTX0	INTRX0	INTNAK0	INTSTOP0	R
			—	—	CLRS0	CLRA0	CLRTX0	CLRRX0	CLRNAK0	CLRSTOP0	W
$001D	IRQ1	00H	—	—	INTS1	INTA1	INTTX1	INTRX1	INTNAK1	INTSTOP1	R
			—	—	CLRS1	CLRA1	CLRTX1	CLRRX1	CLRNAK1	CLRSTOP1	W
			—	—	—	—	CLRADC	CLRV	CLRE1	CLRMR	W
Selection of Edge Triggers for INTE0 & 1 Interrupt											
$001F	TRIGGER	FFH	—	—	—	—	—	INTVR	INTE1R	INTE0R	R/W

12. I/O PORTs

The NT68F62 has 25 pins dedicated to input and output. These pins are grouped into 4 ports.

12.1. PORT0: P00 - P07

PORT0 is an 8-bit bi-directional CMOS I/O port with PMOS as internal pull-up (Figure 12.1). Each pin of PORT0 may be bit programmed as an input or output port without software controlling the data direction register. When Port0 works as an output, the data to be output are latched to the port data register and output to the pin. PORT0 pins that have '1's written to them are pulled HIGH by the internal PMOS pull-ups. In this state they can be used as inputs and then the input signals can be read. This port output is high after reset.

P00 - P05 are shared with DAC7 - DAC12 respectively. If $\overline{ENDK7}$ - $\overline{ENDK12}$ is set to LOW in the ENDAC register, P00 - P05 will act as DAC7 - DAC12 respectively (Figure 12.2). After the chip is reset, $\overline{ENDK7}$ - $\overline{ENDK12}$ will be in the HIGH state and P00 - P05s will act as I/O ports.

P06 、 P07 are shared with VSYNCO & HSYNCO respectively. If $\overline{ENHOUT}$ 、 $\overline{ENVOUT}$ is set to LOW in the HVCON register, P06 、 P07 will act as VSYNCO & HSYNCO respectively (Figure 12.3). After the chip is reset, $\overline{ENHOUT}$ & $\overline{ENVOUT}$ will be in the HIGH state and P06 、 P07 will act as I/O pins.

Addr.	Register	INIT	Bit7	Bit6	Bit5	Bit4	Bit3	Bit2	Bit1	Bit0	R/W
$0000	PT0	FFH	P07	P06	P05	P04	P03	P02	P01	P00	RW
$0007	HV CON	FFH	—	—	HSYNCI	VSYNCI	HPOLI	VPOLI	HPOLO	VPOLO	R
		FFH	$\overline{ENHOUT}$	$\overline{ENVOUT}$	—	—	—	—	HPOLO	VPOLO	W
$000F	ENDAC	FFH	—	—	$\overline{ENDK12}$	$\overline{ENDK11}$	$\overline{ENDK10}$	$\overline{ENDK9}$	$\overline{ENDK8}$	$\overline{ENDK7}$	W

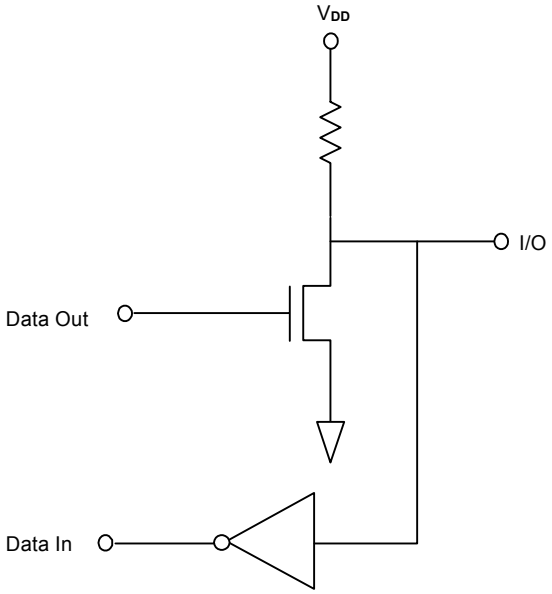

Figure 12.1. I/O Structure

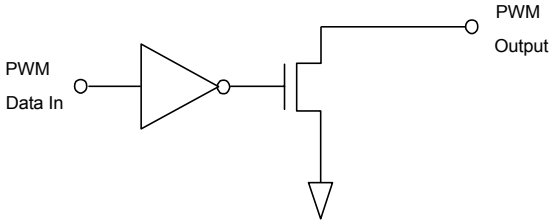

Figure 12.2. PWM Output Structure

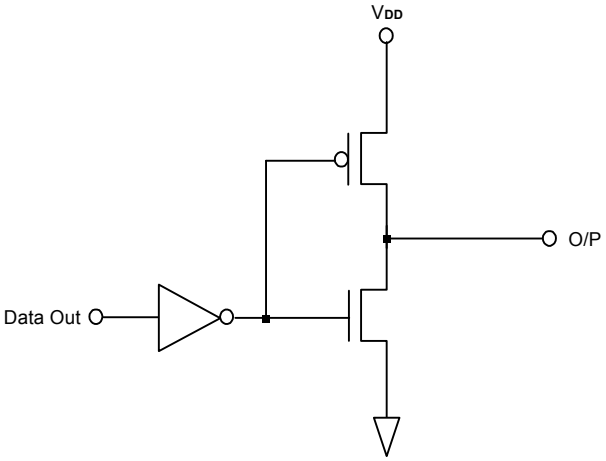

Figure 12.3. Output Structure

12.2. Port1: P10 - P16

PORT10 - PORT16 is a 7-bit bi-directional CMOS I/O port with PMOS as internal pull-up (Figure 12.1). Each bi-directional I/O pin may be bit programmed as an input or output port without software controlling the data direction register. When Port1 works as an output, the data to be output is latched to the port data register and output to the pin. Port1 pins that have '1's written to them are pulled high by the internal PMOS pull-ups. In this state they can be used as inputs and then the input signals can be read. This port output is high after reset.

P10 & P11 are shared with AD0 & AD1 input pins respectively. If the ENADC0/$\overline{1}$ bit in the ENADC control register is cleared to LOW, the A/D converters will activate simultaneously. After the chip is reset, ENADC0/$\overline{1}$ bits will be in the HIGH state and P10 - P11 will act as I/O pins.

P12、P13 are shared with the HALF SIGNALS input and OUTPUT pins by accessing the OUTCON control register. If the $\overline{\text{ENHALF}}$ bit is cleared to LOW, P13 will switch to HALFHI pin (input pin) and P12 will switch to HALFHO pin (output pin, Figure 12.3). For HALFHI & HALFHO pin descriptions, please refer half frequency function in the H/V sync processor paragraph. After the chip is reset, the $\overline{\text{ENHALF}}$ bits will be in the HIGH state and P12、P13 will act as I/O pins.

P14 is shared with the output pin of the self test pattern. If users clear the $\overline{\text{PATTERN}}$ bit in the SYNCON control register and the free running function has been activated, the P14 will switch to be the output pin of the self test pattern. This pattern output pin is of the push-pull structure. After the chip is reset, the $\overline{\text{PATTERN}}$ bits will be in the HIGH state and P14 will act as an I/O pin. (Refer to the 'Syncprocessor' section for more detailed information.)

P15 & P16 can be shared with the external interrupt INTE0 & INTE1 pins if the INTE0/1 bits are set in the control register of the interrupt enable ($0018 & $001B). These interrupt pins have 'Schmitt Trigger' input buffers. After the chip is reset, INTE0/1 bits will be in the HIGH state and P15 & P16 will act as I/O pins.

Refer to the 'INTERRUPT CONTROLLER' paragraph above for more details about the interrupt function.

Addr.	Register	INIT	Bit7	Bit6	Bit5	Bit4	Bit3	Bit2	Bit1	Bit0	R/W
$0001	PT1	7FH	—	P16	P15	P14	P13	P12	P11	P10	RW
$000C	FREECON	FFH	$\overline{\text{ENPAT}}$	$\overline{\text{PAT0}}$	—	—	—	FREQ2	$\overline{\text{FREQ1}}$	$\overline{\text{FREQ0}}$	W
$0010	ENADC	FFH	$\overline{\text{CSTA}}$	—	—	—	$\overline{\text{ENADC3}}$	$\overline{\text{ENADC2}}$	$\overline{\text{ENADC1}}$	$\overline{\text{ENADC0}}$	W
$0018	IENMI	00H	—	—	—	—	—	—	INTE0	INTMUTE	RW
$001B	IEIRQ2	00H	—	—	—	—	—	INTV	INTE1	INTMR	RW

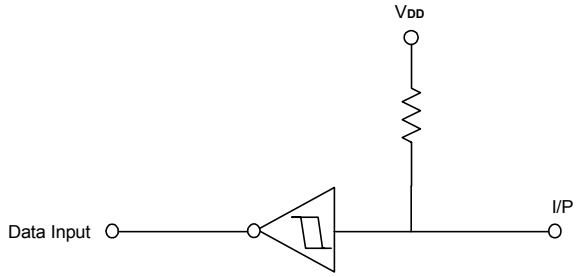

Figure 12.4. Schmitt Input Structure

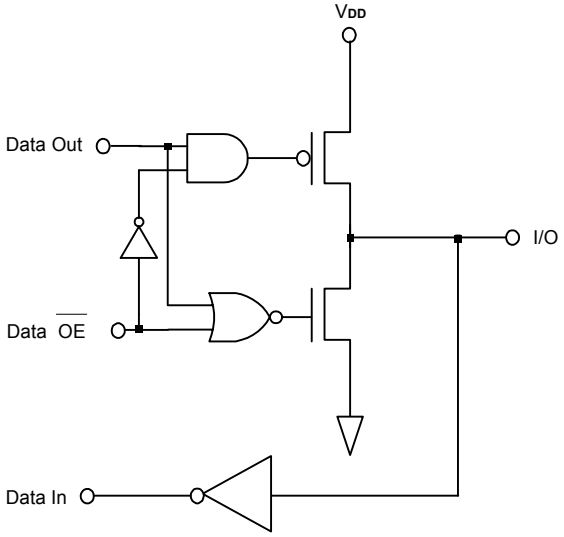

Figure 12.5. I/O Structure

12.3. PORT2: P20 - P27

PORT2, an 8-bit bi-directional I/O port (Figure 12.5), may be programmed as an input or output pin by the software control. When setting the PT2DIR control bit to '0', its correspondent pin will act as an output pin. On the other hand, clear PT2DIR bit to '1'and it will act as an input pin. When programmed as an input pin, it has an internal pull-up resistor. When programmed as an output pin, the data to be output is latched to the port data register and output to the pin with a push-pull structure. This port acts as an input port after reset.

Addr.	Register	INIT	Bit7	Bit6	Bit5	Bit4	Bit3	Bit2	Bit1	Bit0	R/W
$0002	PT2DIR	FFH	$\overline{P27OE}$	$\overline{P26OE}$	$\overline{P25OE}$	$\overline{P24OE}$	$\overline{P23OE}$	$\overline{P22OE}$	$\overline{P21OE}$	$\overline{P20OE}$	W
$0003	PT2	FFH	P27	P26	P25	P24	P23	P22	P21	P20	RW
$0010	ENADC	FFH	$\overline{CSTA}$	—	—	—	$\overline{ENADC3}$	$\overline{ENADC2}$	$\overline{ENADC1}$	$\overline{ENADC0}$	W
$0029	CH1CON	FFH	$\overline{ENDDC}$	MD1/ $\overline{2}$	$\overline{SRW}$	START	STOP	RXACK	TXACK	—	RW

12.4. PORT3: P30 - P31

PORT3 is a 2 bit bi-directional open-drain I/O port (Figure 12.6). Each pin of Port3 may be bit programmed as an input or output port with open drain structure. When Port3 works as an output pin, the data to be output is latched to the port data register and output to the pin. When Port3 pins have '1's written to them, users must connect PORT3 with the external pulled-up resistor and then PORT3 can be used as an input (the input signal can be read). This port output is hiGH after reset.

P30、P31 include Schmitt Trigger buffers for noise immunity and can be configured as the IIC pins SDA0 & SCL0 respectively. If $\overline{ENDDC}$ is set to LOW in the CH0DDC control register, P30、P31 will act as SDA0 & SCL0 I/O pins respectively and will be of an open drain structure (Figure 12.6). After the chip is reset, this $\overline{ENDDC}$ bit will be in the HIGH state and PORT3 will act as I/O pin.

Addr.	Register	INIT	Bit7	Bit6	Bit5	Bit4	Bit3	Bit2	Bit1	Bit0	R/W
$0004	PT3	FFH	—	—	—	—	—	—	P31	P30	RW
$0024	CH0CON	FFH	$\overline{ENDDC}$	MD1/ $\overline{2}$	$\overline{SRW}$	START	STOP	RXACK	TXACK	—	RW

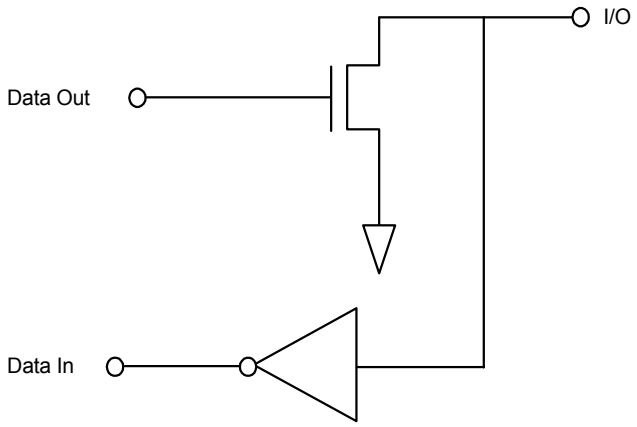

Figure 12.6. PORT3

12.5. PORT4: P40 - P41

PORT4 is available only on the 42pin SDIP IC. PORT40 - PORt41 is a 2-bit bi-directional CMOS I/O port with PMOS internal pull-up (Figure 12.1). Each bi-directional I/O pin may be bit programmed as an input or output port without software controlling the data direction register. When Port4 works as an output port, the data to be output is latched to the port data register and output to the pin. Port4 pins that have '1's written to them are pulled high by the internal PMOS pull-ups. In this state they can be used as input pins. The input signal can be read. This port outputs HIGH after reset.

Addr.	Register	INIT	Bit7	Bit6	Bit5	Bit4	Bit3	Bit2	Bit1	Bit0	R/W
$0005	PT4	FFH	—	—	—	—	—	—	P41	P40	RW

13. H/V Sync Signals Processor

The functions of the sync processor include polarity detection, Hsync & Vsync signals counting, and programmable sync signals output. It also provides 3-sets of free running signals and special outputs of the test pattern during the burn-in process when activating the free running output function. The NT68F62 can properly handle either composite or separate sync signal inputs even without sync signal input. As to processing the composite sync signal, a hardware separator will be activated to extract the HSYNC signal under the users control. The input at HSYNCI can be either a pure horizontal sync signal or a composite sync signal. For the sync waveform refer to Figure 13.1 & Figure 13.2.
The sync processor block diagram is shown in Figure 13.3. Both VSYNCI & HSYNCI pins have Schmitt Triggers and filtering processes to improve noise immunity. Any pulse that is shorter than 125 ns, will be regarded as a glitch and will be ignored.

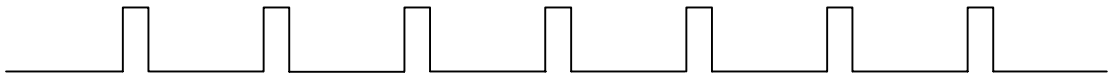

(a) Positive polarity

(b) Negative polarity

Figure 13.1. Separate H Sync. Waveform

(a) Positive Polarity

(b) Negative Polarity

Figure 13.2. Composite H Sync. Waveform

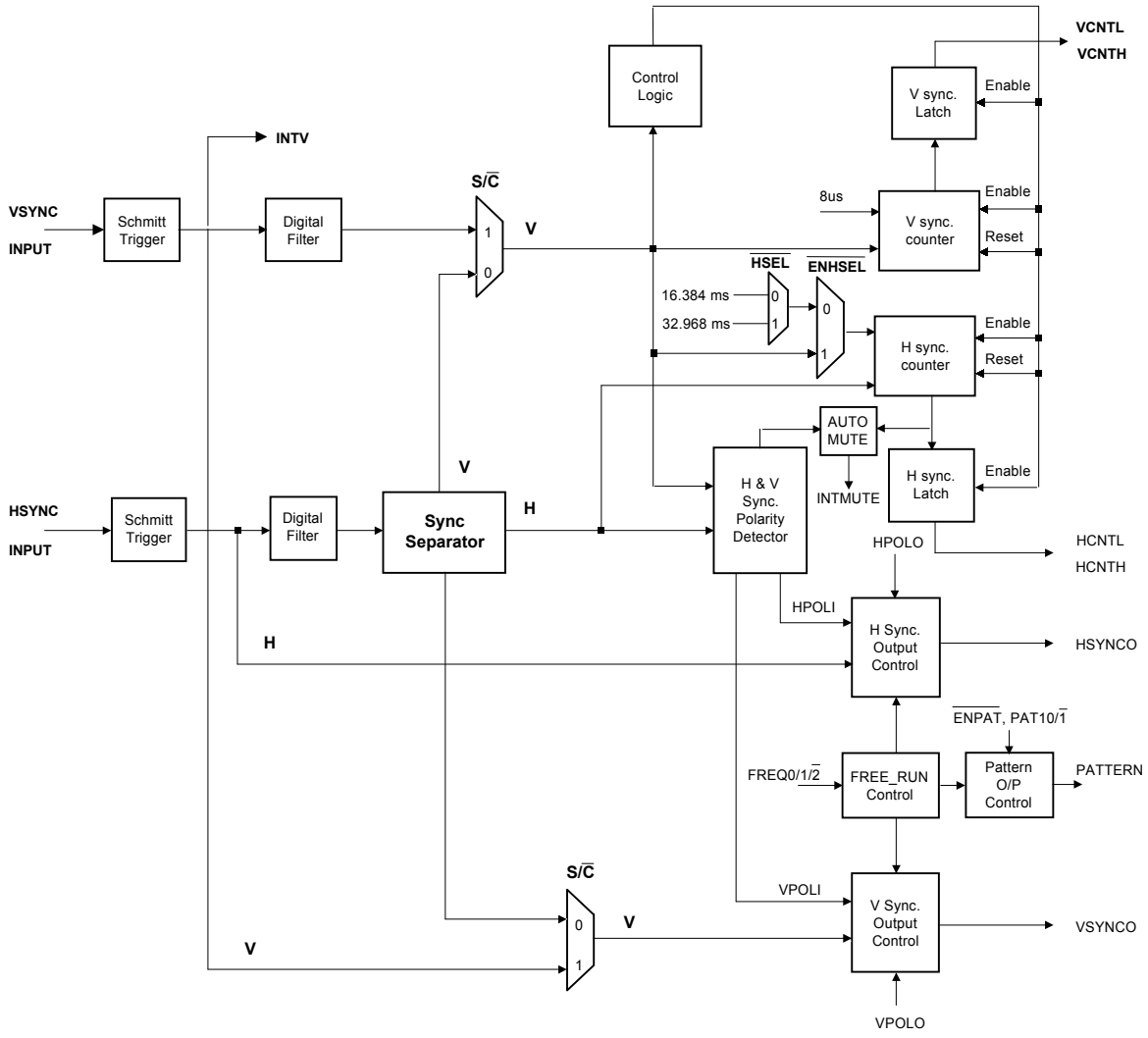

Figure 13.3. Sync. Processor Block Diagram

13.1. V & H Counter Register: VCNTL/H, HCNTL/H

Vsync counter: VCNTL/H, the 14-bit READ ONLY register, contains information on the Vsync frequency. An internal counter counts the numbers of 8us pulses between two VSYNC pulses. When the next VSYNC signal is recognized, the counter is stopped and the VCNTH/L register latches the counter value. Then the counter counts from zero again for evaluating the next VSYNC time interval. The counted data can be converted to the time duration between two successive Vsync pulses. If there is no VSYNC signal , the counter will overflow and set the VCNTOV bit (in the VCNTH register) to HIGH. Once the VCNTOV is set to HIGH, it stays in the HIGH state until '1' is written to it (CLRVOV bit).

Hsync counter: If the $\overline{\text{ENHSEL}}$ bit is set to HIGH, the internal counter counts the Hsync pulses between two Vsync pulses. The HCNTL/H control registers contain the numbers of Hsync pulse between two Vsync pulses. These data can determine if the Hsync frequency is valid or not to determine the accurate video mode.

The system supports two other options of the time interval for the user to count the frequency of Hsync pulses. If users clear the $\overline{\text{ENHSEL}}$ and set the $\overline{\text{HSEL}}$ bits properly, this internal counter counts the Hsync pulses during a system defined time interval. The time interval is defined below:

$\overline{\text{ENHSEL}}$	$\overline{\text{HSEL}}$	Hsync Freq	Note
1	-	Disabled	After system reset or users disabling
0	0	16.384 ms	
0	1	32.768 ms	

After system reset, this interval will be disabled and the content of $\overline{\text{ENHSEL}}$ & $\overline{\text{HSEL0}}$ bits will be '1'. When this function is disabled, the HCNTL/H counter works on the VSYNC pulse. It is invalid to write '00' to them.

Latching the hsync counter: The counted value will be latched by the HCNTH/L register pairs that are updated by the Vsync pulse or by the system defined time interval. (Refer to the Figure 13.4 for the operation of the HCNTL/H counter.) If the counter overflows, the HCNTOV bit (in the HCNTH register) will be set to HIGH. Once the HCNTOV is set to HIGH, it keeps in the HIGH state until '1' is written to it (CLRHOV bit). When setting this CLRHOV bit, the HCNT counter will not be reset to zero.

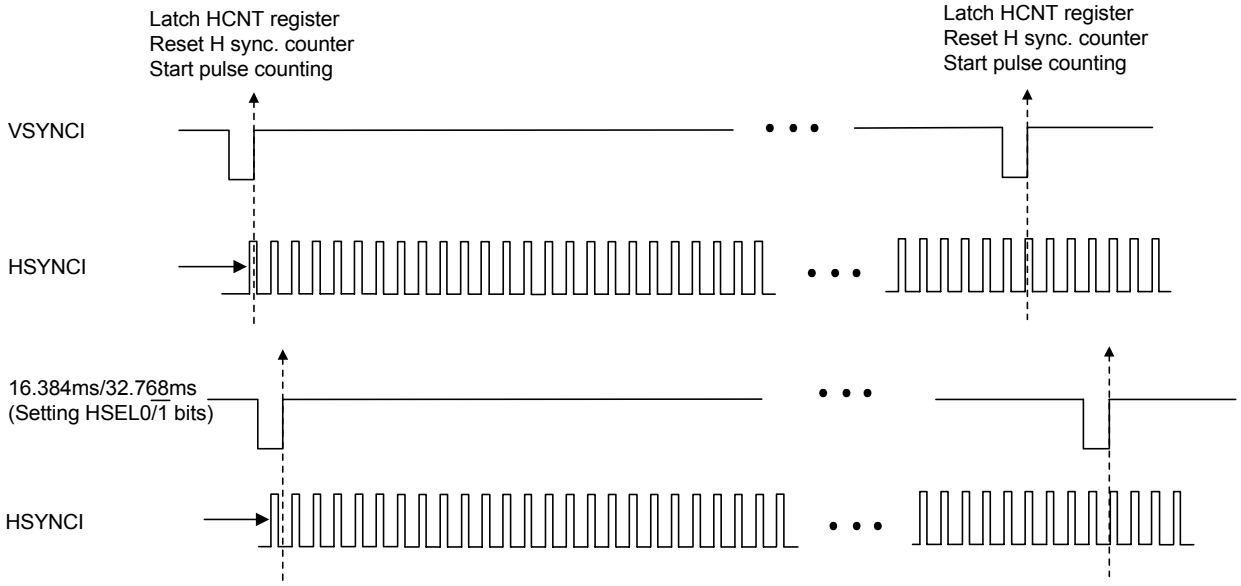

Figure 13.4. Hsync Counter Operation

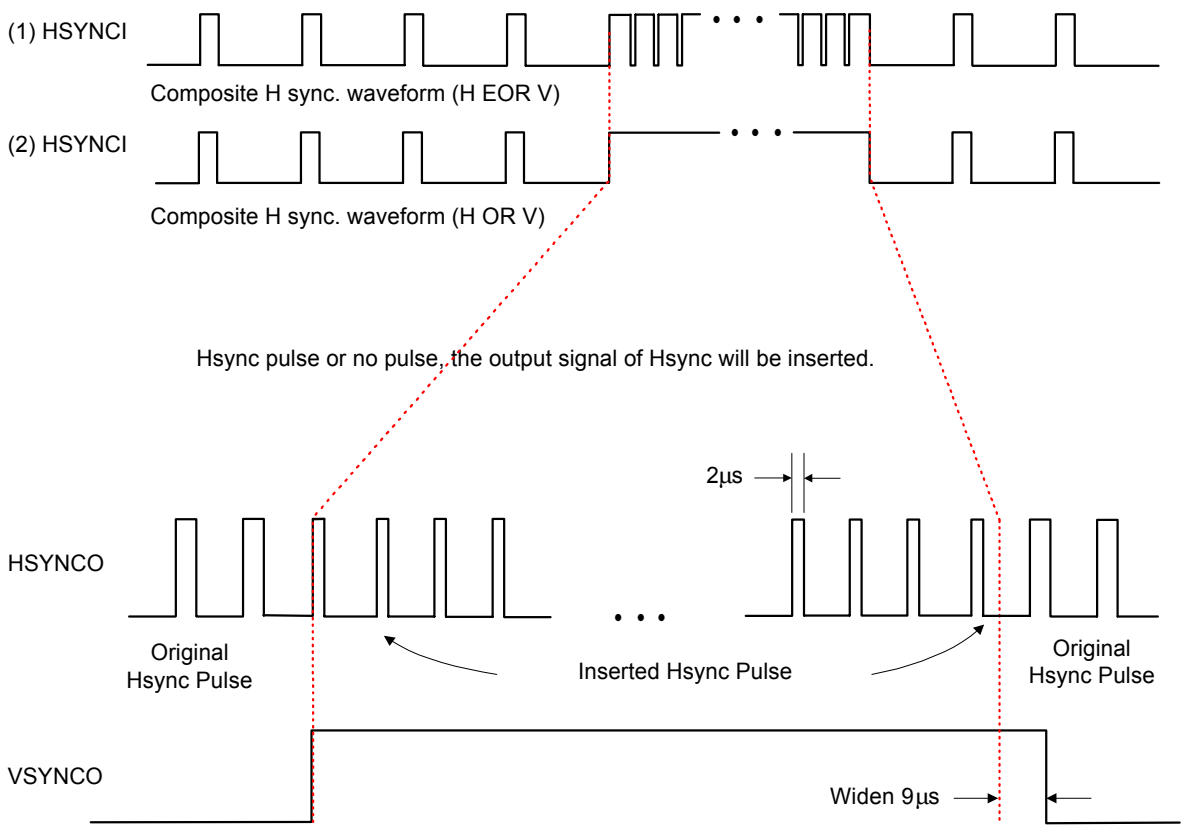

Figure 13.5. Composite H & V Sync. Processing

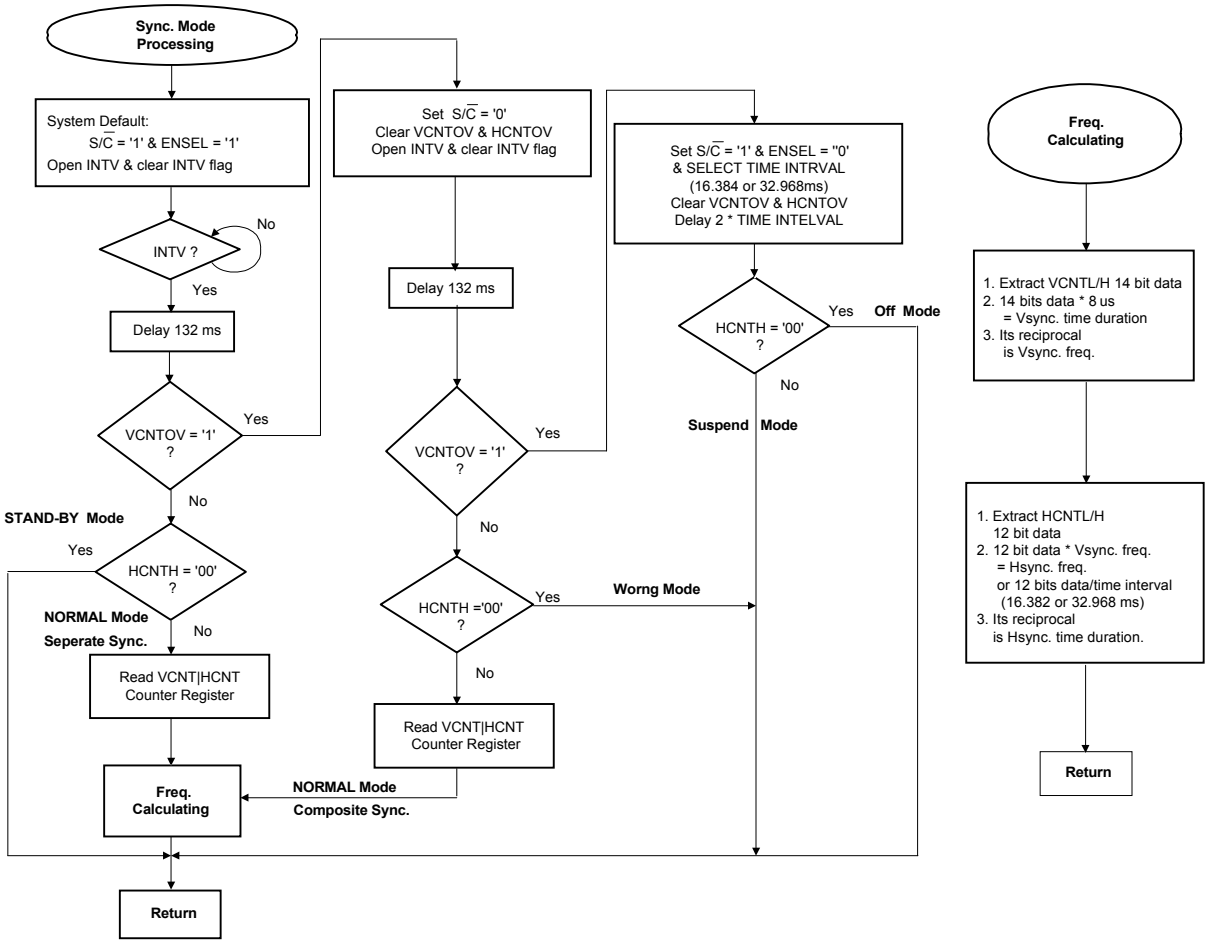

Figure 13.6. H & V Sync. Software Control Flow Chart (for reference only)

13.2. Sync Processor Control Register:

Polarity: The detection of Hsync or Vsync polarity is achieved by the hardware circuit that samples the sync signal's voltage level periodically. Users can read the HPOLI & VPOLI bits from the HVCON register, the bit = '1' represents positive polarity and '0' represents negative polarity. Furthermore, users can read the HSYNCI and VSYNCI bits in the HVCON register to detect the H & V sync input signal. Users can control the polarity of the H & V sync output signal by writing the appropriate data to the HPOLO and VPOLO bits in the HVCON register, '1' represents positive polarity and '0', negative polarity.

Composite sync: Users have to determine whether the incoming signal is separate sync or composite sync and set the S/$\overline{C}$ & $\overline{ENHSEL}$ / $\overline{HSEL}$ bit properly. If the input sync signal is composite and after setting S/$\overline{C}$ to '0', the sync separator block will be activated (please refer to Figure 13.5). At the area of a Vsync pulse, there can exist Hsync pulses or not. For the output of Hsync, users can activate hardware to interpolate the Hsync pulses in that area by clearing the $\overline{INSEN}$ bit. The width of these inserted pulses is fixed at 2uS and the time interval is the same as the previous one. According to the last Hsync pulse outside the Vsync pulse duration, the hardware will arrange the interval of these hardware interpolated pulses. These inserted Hsync pulse perhaps have maximum phase deviation of 125 nS. The Vsync pulse can be extracted by hardware from the composite Hsync signal and the delay time of the output Vsync signal will be limited to less than 20ns. To insert the Hsync pulse safely, the extracted Vsync pulse will be widened about 9µs. Although , the system will insert the Hsync pulse evenly, the last inserted Hsync pulse will have a different frequency from the original ones.
The system will not implement this insertion function so users must clear the $\overline{INSEN}$ bit in the SYNCON control register to activate this function. After reset, the S/$\overline{C}$ & $\overline{INSEN}$ bits default value are HIGH and clear the VCNT | HCNT counter latches to zero.

Sync output: In pin assignment, VSYNCO & HSYNCO represent Vsync & Hsync output, which are shared with P06 & P07 respectively. If $\overline{ENVOUT}$ & $\overline{ENHOUT}$ are set to '0' in the HVCON register, P06 & P07 will act as VSYNCO & HSYNCO output pins. When the input sync is a separate signal, the V/HSYNCO will output the same signal as the input without delay. But if the input sync is a composite signal, the VSYNCO signal will have a fixed delay time of about 20ns and the HSYNCO has a nonfixed delay time of about 125ns.

Half frequency Input and output: In pin assignment, when users set $\overline{ENHALF}$ bits to '0' in the HALFCON register, the HALFHO pin will act as an output pin and output half of the input signal in the HALFHI pin with 50% duty (see Figure 13.7). If set $\overline{NOHALF}$ to '0', HALFHO will output the same signal in the HALFHI pin and the user can control its polarity of output HALFHO by setting HALFPOL bit, '1' for positive and '0' for negative polarity. After the chip is reset, $\overline{ENHALF}$ 、$\overline{NOHALF}$ & HALFPOL will be in the HIGH state and P12 & P13 will act as I/O pins. It is recommended to add a Schmitt Trigger buffer at the front of the HALFI pin.

Free run signal output: The user can select one of the free running frequencies (listed below) outputting to HYSNCO & VSYNCO pin by setting the $\overline{FREQ0/1/2}$ bits. If the user does not enable the H/VSYNCO by clearing the $\overline{ENVOUT}$ or the $\overline{ENHOUT}$ bits, any setting of $\overline{FREQ0/1/2}$ bits will be invalid. After system reset, NT68F62 does not provide free running frequency and both of the FREQ0/1/2 bits are set to ' 1'. The free running frequency can be set according the table below:

Free Running Freq.	$\overline{FREQ2}$	$\overline{FREQ1}$	$\overline{FREQ0}$	Hsync Freq.	Vsync Freq.	Note
1	0	0	0	8M/256=31.2K	Hsync/512=61.0Hz	Refer to Figure 13.7
2	0	0	1	8M/4/9/5=44.4K	Hsync/512=86.8Hz	
3	0	1	0	8M/128=62.5K	Hsync/3/5/7/8=74.4Hz	
4	0	1	1	8M/4/5/5=80K	Hsync/1024=78.1Hz	
5	1	0	0/1	8M/4/2/11=90.9K	Hsync/1024=88.7Hz	
	1	1	0			
	1	1	1	Disabled Free Run function		After System Reset

Self test pattern: On activating the free running function, the system will generate the test pattern when clearing the $\overline{\text{ENPAT}}$ bit. The PORT14 pin will switch from I/O pin to pattern output pin (push-pull structure). The system provides four types of test patterns. Refer to the figure below. Set the $\overline{\text{PAT0}}$ bits to select the pattern type (Figure 13.8). If the free run function has not been enabled, any change of $\overline{\text{ENPAT}}$ & $\overline{\text{PAT0}}$ bits will be invalid. Refer to the Figure 13.9 for the porch time of the video pattern.

$\overline{\text{PAT0}}$	Test Pattern	Note
0	(1)	Only activated when $\overline{\text{ENPAT}}$ bit is cleared
1	(2)	

The porches of the self test pattern are listed below:

Free Running Freq.	Front Porch of VBLANK	BACK Porch of VBLANK	Front Porch of HBLANK	BACK Porch of HBLANK	VSYNC PULSE WIDTH	HSYNC PULSE WIDTH
1	128µs	864µs	460ns	2.00µs	64µs	1µs
2	90.5µs	589µs	1.18µs	1.93µs	64µs	1µs
3	51µs	528µs	424ns	1.92µs	64µs	1µs
4	51.5µs	596µs	185ns	1.94µs	64µs	1µs
5	46.6µs	515µs	436ns	1.94µs	64µs	1µs

Mode change detection: The system provides a hardware detection of a Sync signal change and supports the user to respond to this transition with a proper process as soon as possible. There are three kinds of detection that will set the INTMUTE bit.

Hsync counter: Users can enable the HDIFF comparison by clearing the $\overline{\text{ENHDIFF}}$ bit and then preloading a different value to the HDIFF0-3 bits in the AUTOMUTE control register ($000E). The system will latch the new value of theHsync counter and compare it with the last latched value. If this difference is great than the user defined value at theHDIFF0-3 bits then the system will set the INTMUTE interrupt bit.

H/V polarity: Users can enable polarity detection by clearing the $\overline{\text{ENPOL}}$ bit. The system will set the INTMUTE bit when the polarity of Hsync or Vsync have been changed.

H/V counter overflow: Users can enable the detection of sync counters overflow by clearing the $\overline{\text{ENOVER}}$ bit. The system will set the INTMUTE bit whenever the counter of Hsync or Vsync has overflowed.

The above three sources of setting this INTMUTE bit can be enabled or disabled by user. If the user opens this interrupt and this interrupt event occured, the system will generate a NMI interrupt to remind users any time. At the user's manipulation, a software debounce to confirm the transition of a sync signal one more time will make the frequency detection more stable and reliable, but it will affect the response time. After the system reset, this 'automute' function will be disabled and the HDIFF0~2 control bits will be cleared to ' $0F'.

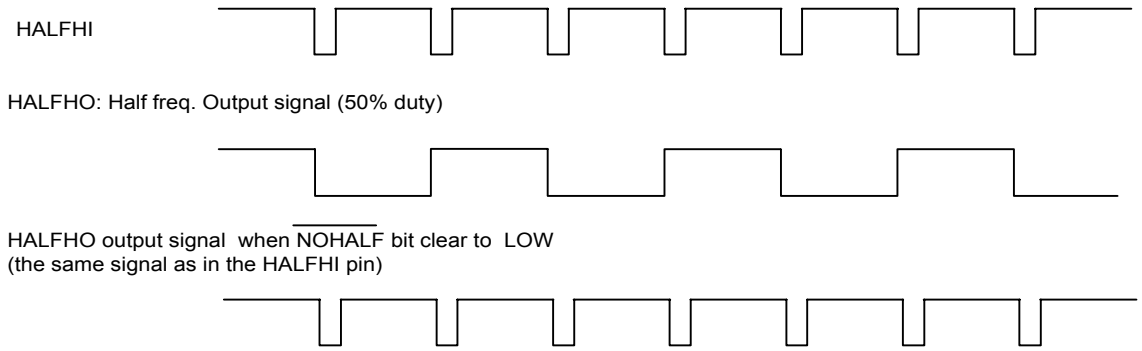

Figure 13.7. Half Freq. Sync. Waveform

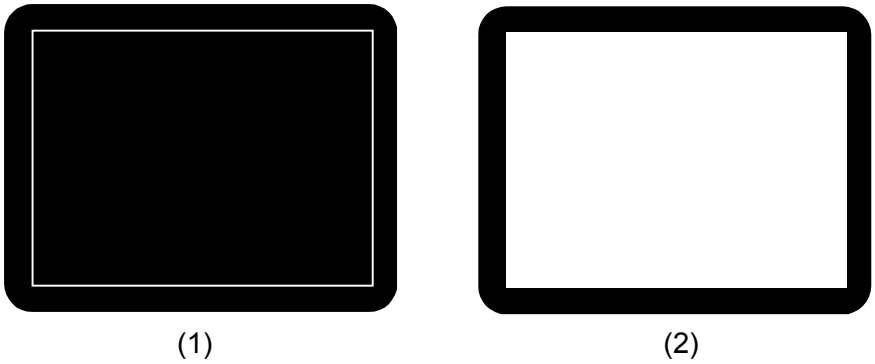

Figure 13.8. Two Types of Testing Pattern

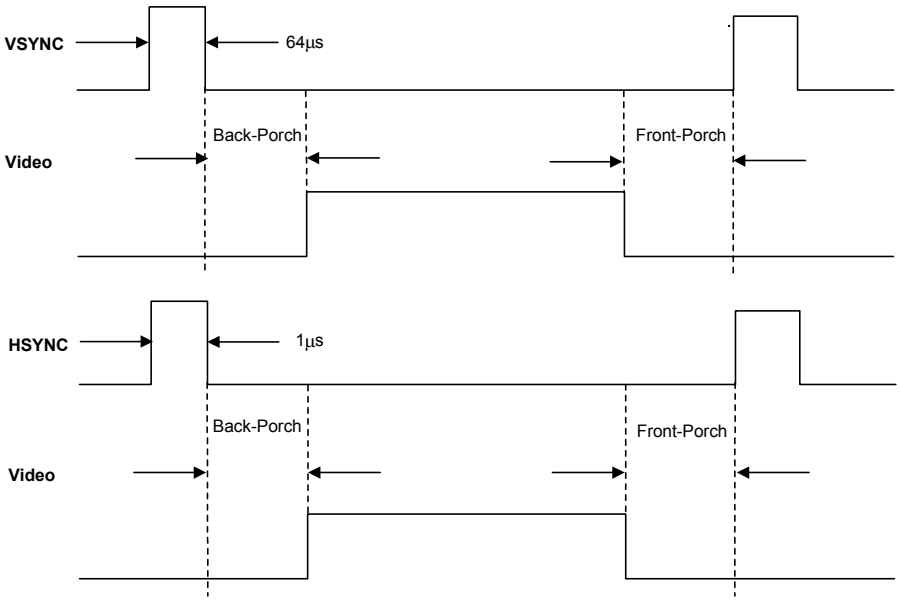

Figure 13.9. The Porch of the Free Running Self Test Pattern

13.3 Power Saving Mode detect:

Video modes are listed below, especially from mode 2 to mode 4 just for power saving. All of the modes can be easily detected by NT68F62 (Figure 13.6).

Mode	H-Sync	V-Sync
(1) Normal	Active	Active
(2) Stand-by	Inactive	Active
(3) Suspend	Active	Inactive
(4) Off	Inactive	Inactive

Control Bit Description:

Addr.	Register	INIT	Bit7	Bit6	Bit5	Bit4	Bit3	Bit2	Bit1	Bit0	R/W
Control Registers for Synprocessor											
$0006	SYNCON	FFH	—	—	—	—	$\overline{\text{INSEN}}$	—	$\overline{\text{HSEL}}$	S/$\overline{\text{C}}$	R
		FFH	—	—	—	—	$\overline{\text{INSEN}}$	$\overline{\text{ENHSEL}}$	$\overline{\text{HSEL}}$	S/$\overline{\text{C}}$	W
$0007	HV CON	FFH	—	—	HSYNCI	VSYNCI	HPOLI	VPOLI	HPOLO	VPOLO	R
		FFH	$\overline{\text{ENHOUT}}$	$\overline{\text{ENVOUT}}$	—	—	—	—	HPOLO	VPOLO	W
$0008	HCNT L	00H	HCL7	HCL6	HCL5	HCL4	HCL3	HCL2	HCL1	HCL0	R
$0009	HCNT H	00H	HCNTOV	—	—	—	HCH3	HCH2	HCH1	HCH0	R
			CLRHOV	—	—	—	—	—	—	—	W
$000A	VCNT L	00H	VCL7	VCL6	VCL5	VCL4	VCL3	VCL2	VCL1	VCL0	R
$000B	VCNT H	00H	VCNTOV	—	VCH5	VCH4	VCH3	VCH2	VCH1	VCH0	R
			CLRVOV	—	—	—	—	—	—	—	W
$000C	FREECON	FFH	$\overline{\text{ENPAT}}$	$\overline{\text{PAT0}}$	—	—	—	$\overline{\text{FREQ2}}$	$\overline{\text{FREQ1}}$	$\overline{\text{FREQ0}}$	W
$000D	HALFCON	FFH	$\overline{\text{ENHALF}}$	$\overline{\text{NOHALF}}$	HALFPOL	—	—	—	—	—	W
$000E	AUTOMUTE	FFH	$\overline{\text{ENHDIFF}}$	$\overline{\text{ENPOL}}$	$\overline{\text{ENOVER}}$	—	HDIFFVL3	HDIFFVL2	HDIFFVL1	HDIFFVL0	W

14. Base Timer (BT)

The BASE TIMER is an 8-bit counter, and its clock source can be chosen from 1μs or 1ms by setting the BTCLK bit ('0' for 1μs and '1' for 1ms). The BT can be enabled or disabled by the $\overline{ENBT}$ bit in the BTCON register. The BT will start counting while clearing the $\overline{ENBT}$ bit to '0'. After the chip is reset, the BTCLK and $\overline{ENBT}$ bits are set to '1' (the BT is disabled). Before enabling the BT, it can be preloaded with a value by writing a value to the BT register (write only) at any time and then the BT will start to count up from this preloaded value. When the BT's value reaches FFH, it will generate a timer interrupt if the timer interrupt is enabled, and then the counter will wrap around to 00H. The timer's maximum interval is 256ms or 256μs depending on the BTCLK value.

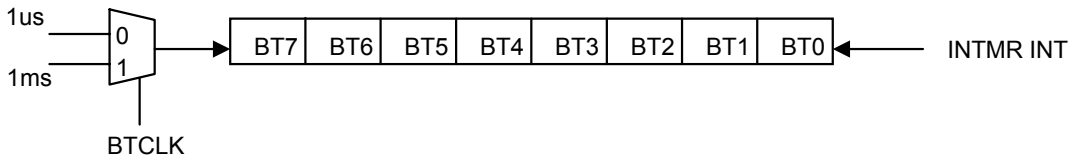

Control Bit Description:

Addr.	Register	INIT	Bit7	Bit6	Bit5	Bit4	Bit3	Bit2	Bit1	Bit0	R/W
$002E	BT	00H	BT7	BT6	BT5	BT4	BT3	BT2	BT1	BT0	W
$002F	BT CON	03H	—	—	—	—	—	—	$\overline{BTCLK}$	$\overline{ENBT}$	W

15. IIC Bus Interface: DDC1 & DDC2B Slave Mode

Interface: IIC bus interface is a two-wire, bi-directional serial bus which provides a simple, efficient way for data communication between devices, and minimizes the cost of connecting among various peripheral devices. NT68F62 provides two IIC channels. Both of them are shared with I/O pins and their structures are open drain. When the system is reset, these channels are originally of general I/O pin structure. All of these IIC bus functions will be activated only after their $\overline{\text{ENDDC}}$ bits are cleared to '0' (CH0/1CON registers).

DDC1 & DDC2B+ function: Two modes of operation have been implemented in the NT68F62, uni-directional mode (DDC1 mode) and bi-directional mode (DDC2B+ mode). These channels will be activated as DDC1 function initially when users enable the DDC function. These channels will switch automatically to DDC2B+ function from DDC1 function when a low pulse greater than 500ns is detected on the SCL line. Users can start a master communication directly from the DDC1 communication by clearing the $\overline{\text{MODE}}$ bit in the CH0/1CLK control register.

The channels can return to DDC1 function when users set the MD1/$\overline{2}$ bit to '1' in the CH0/1CON registers.

15.1. DDC1 bus interface

Vsync input and SDA pin: In DDC1 function, the Vsync pin is used as an input clock pin and the SDA pin is used as a data output pin. This function comprises two data buffers: one is the preloading data buffer for putting one byte data in advance by the user (CH0/1TXDAT), and the other is the shift register for shifting out one bit data to the SDA line, which users can not access directly. These two data buffers cooperate properly. For the timing diagram please refer to Figure 15.1. After the system resets, the IIC bus interface is in DDC1 mode.

Data transfer: At first, the user must put one byte of transmitted data into the CH0/1TXDAT register in advance, and activate the IIC bus by setting the $\overline{\text{ENDDC}}$ bit to '0'. Then open the INTTX0/1 interrupt source by setting INTTX0/1 to '1' in the IEIRQ0/1 registers. On the first 9 rising edges of Vsync, the system will shift out invalid bits in the shift register to the SDA pin to empty the shift register. When the shift register is empty and on the next rising edge of Vsync, it will load data from the CH0/1TXDAT registers to the internal shift register. At the same time, the NT68F62 will shift out the MSB bit and generate an INTTX0/1 interrupt to remind the user to put the next byte data into the CH0/1TXDAT register. After eight rising clocks, there will have been eight bits shifted out in proper order and shift register will become empty again. At the ninth rising clock, it will shift the ninth bit (null bit '1') out to the SDA. And on the next rising edge of Vsync clock, the system will generate an INTTX0/1 interrupt again. In the same way, the NT68F62 will load new data from the CH0/1TXDAT registers to the internal shift register and shift out one bit right away. Beware: the user should put one new data into the CH0/1TXDAT registers before the shift register is empty (the next INTTX0/1 interrupt). If not, the hardware will transmit the last byte of data repeatedly.

Vsync clock: Only in the separate SYNC mode can the Vsync pulse be used as a data transfer clock and its frequency can be up to 25KHz maximum. In composite Vsync mode, NT68F62 can not transmit any data to the SDA pin, regardless of whether the Vsync can be extracted from the composite Hsync signal.

Control Bit Description:

Addr.	Register	INIT	Bit7	Bit6	Bit5	Bit4	Bit3	Bit2	Bit1	Bit0	R/W
$0016	NMIPOLL	00H	—	—	—	—	—	—	INTE0	INTMUTE	R
			—	—	—	—	—	—	CLRE0	CLRMUTE	W
$0017	IRQPOLL	00H	—	—	—	—	—	IRQ2	IRQ1	IRQ0	R
$0019	IEIRQ0	00H	—	—	INTS0	INTA0	INTTX0	INTRX0	INTNAK0	INTSTOP0	RW
$001A	IEIRQ1	00H	—	—	INTS1	INTA1	INTTX1	INTRX1	INTNAK1	INTSTOP1	RW
$001C	IRQ0	00H	—	—	INTS0	INTA0	INTTX0	INTRX0	INTNAK0	INTSTOP0	R
			—	—	CLRS0	CLRA0	CLRTX0	CLRRX0	CLRNAK0	CLRSTOP0	W
$001D	IRQ1	00H	—	—	INTS1	INTA1	INTTX1	INTRX1	INTNAK1	INTSTOP1	R
			—	—	CLRS1	CLRA1	CLRTX1	CLRRX1	CLRNAK1	CLRSTOP1	W
Control Register for DDC1/2B+ of Channel 0											
$0021	CH0ADDR	A0H	ADR7	ADR6	ADR5	ADR4	ADR3	ADR2	ADR1	—	W
$0022	CH0TXDAT	00H	TX7	TX6	TX5	TX4	TX3	TX2	TX1	TX0	W
$0023	CH0RXDAT	00H	RX7	RX6	RX5	RX4	RX3	RX2	RX1	RX0	R
$0024	CH0CON	E0H	$\overline{\text{ENDDC}}$	MD1/$\overline{2}$	—	START	STOP	—	TXACK	—	W
			—	—	$\overline{\text{SRW}}$	START	STOP	RXACK	—	—	R
$0025	CH0CLK	FFH	$\overline{\text{MODE}}$	$\overline{\text{MRW}}$	$\overline{\text{RSTART}}$	—	—	DDC2BR2	DDC2BR1	DDC2BR0	W
Control Register for DDC1/2B+ of Channel 1											
$0026	CH1ADDR	A0H	ADR7	ADR6	ADR5	ADR4	ADR3	ADR2	ADR1	—	W
$0027	CH1TXDAT	00H	TX7	TX6	TX5	TX4	TX3	TX2	TX1	TX0	W
$0028	CH1RXDAT	00H	RX7	RX6	RX5	RX4	RX3	RX2	RX1	RX0	R
$0029	CH1CON	E0H	$\overline{\text{ENDDC}}$	MD1/$\overline{2}$	—	START	STOP	—	TXACK	—	W
			—	—	$\overline{\text{SRW}}$	START	STOP	RXACK	—	—	R
$002A	CH1CLK	FFH	$\overline{\text{MODE}}$	$\overline{\text{MRW}}$	$\overline{\text{RSTART}}$	—	—	DDC2BR2	DDC2BR1	DDC2BR0	W
$003E	ISP REG	00H 03H						ISP	DDC1_ISP CH1_A0	DDC0_ISP CH0_A0	R W

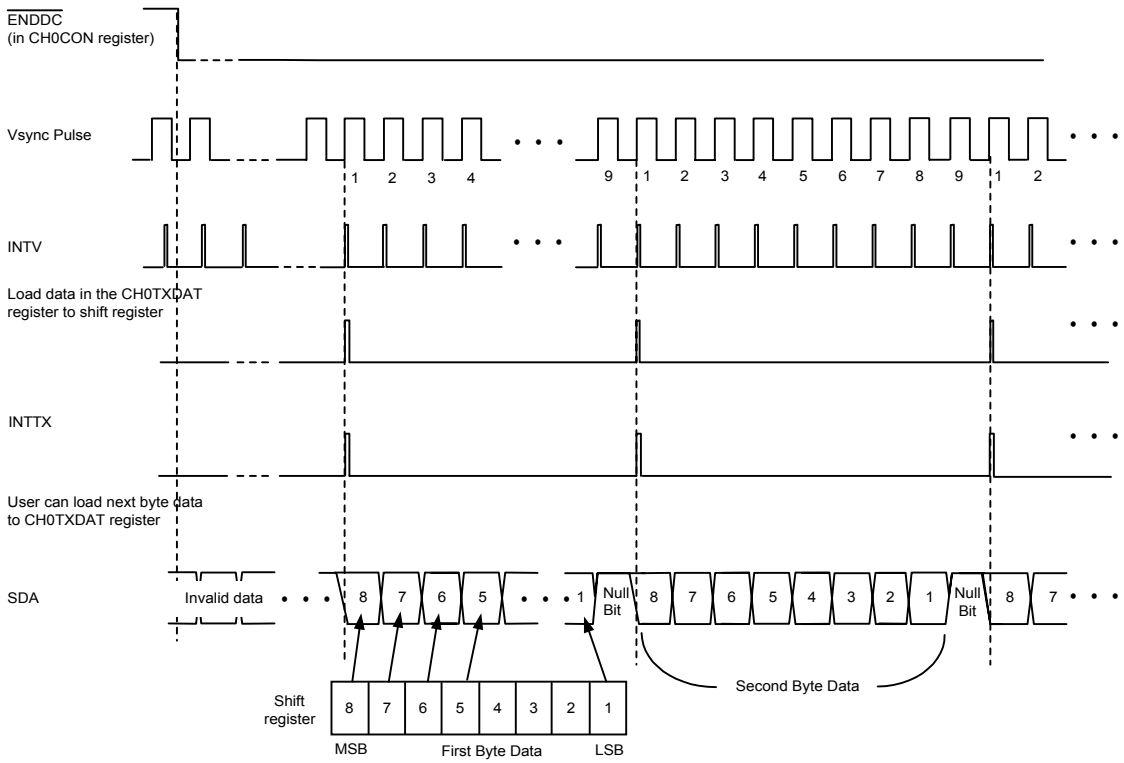

Figure 15.1. DDC1 Mode Timing Diagram

15.2. DDC2B + Slave & Master Mode Bus Interface

The built-in DDC2B+ IIC bus Interface features are as follows:

SLAVE mode (NT68F62 is addressed by a master that drives SCL signal)

- MASTER mode (NT68F62 addresses external devices and sends out the SCL clock)
- Compatible with IIC bus standard
- One default $A0 slave address (can be disabled) and one user programmable address
- Automatic wait state insertion
- Interrupt generation for status control
- Detection of START and STOP signals

The DDC2B+ will be activated as SLAVE mode initially. Users can switch to MASTER mode by clearing the $\overline{\text{MODE}}$ bit under either of these conditions listed as follows:

1. After entering into DDC1 function and clearing this bit, the system will be changed from DDC1 to DDC2B+ MASTER mode operation.
2. After entering into DDC2B+ slave mode function and clearing this bit, the system will be changed from slave mode into master mode operation.

During clearing of the $\overline{\text{MODE}}$ bit, the system will send out a 'START' condition and wait for the user to put the calling address into the CH0/1TXDAT control register. Notice: the user must predetermine the direction of the master mode transmission before putting the calling address.

Below is the DDC2B+ function with channel 0, and the manipulation of channel 1 is the same as channel 0.

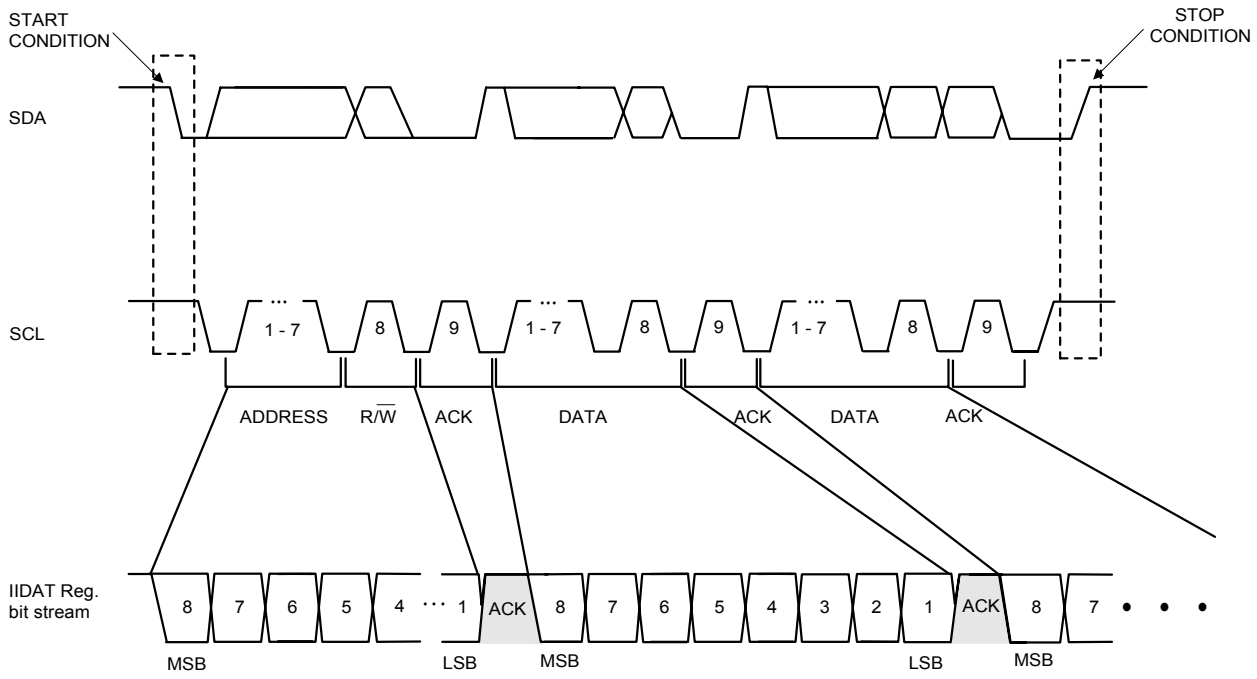

Figure 15.2. DDC2B Data Transfer

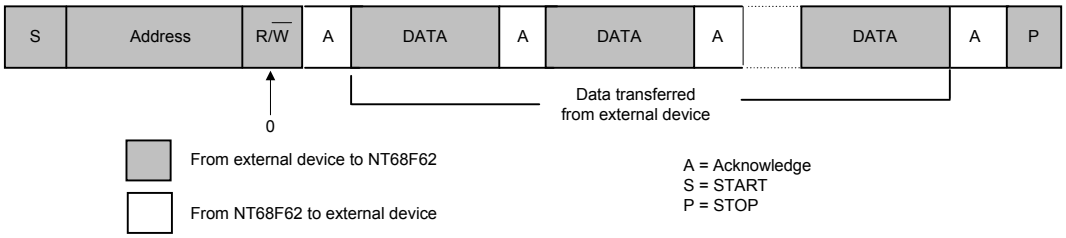

(a) WRITE Mode Data Format

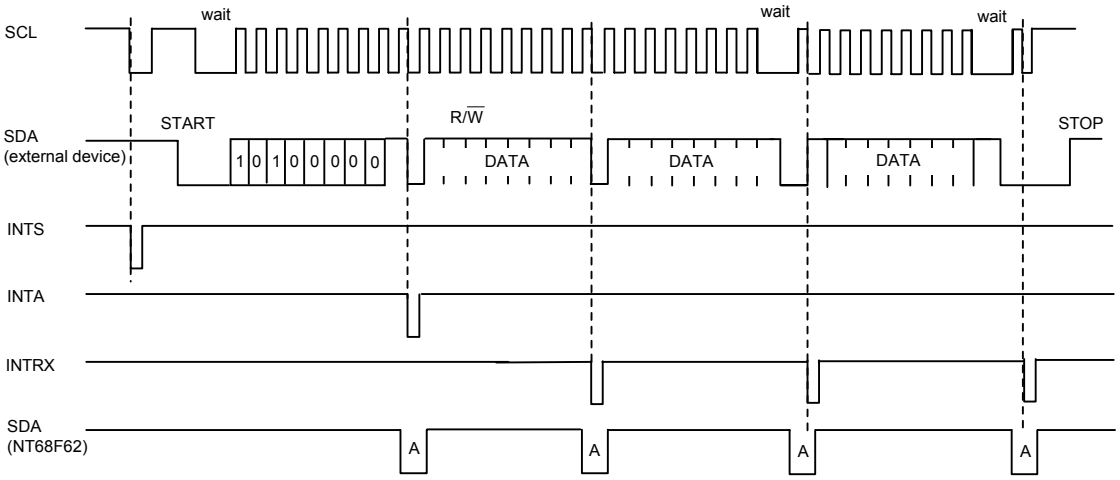

(b) WRITE Mode Timing Diagram

Figure 15.3. DDC2B Write Mode Spec.

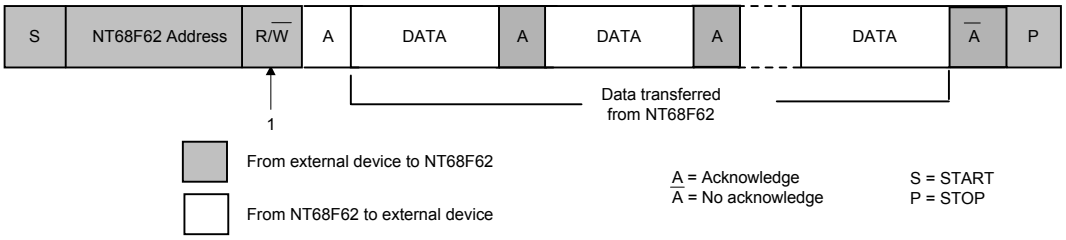

(a) Read Mode Data Format

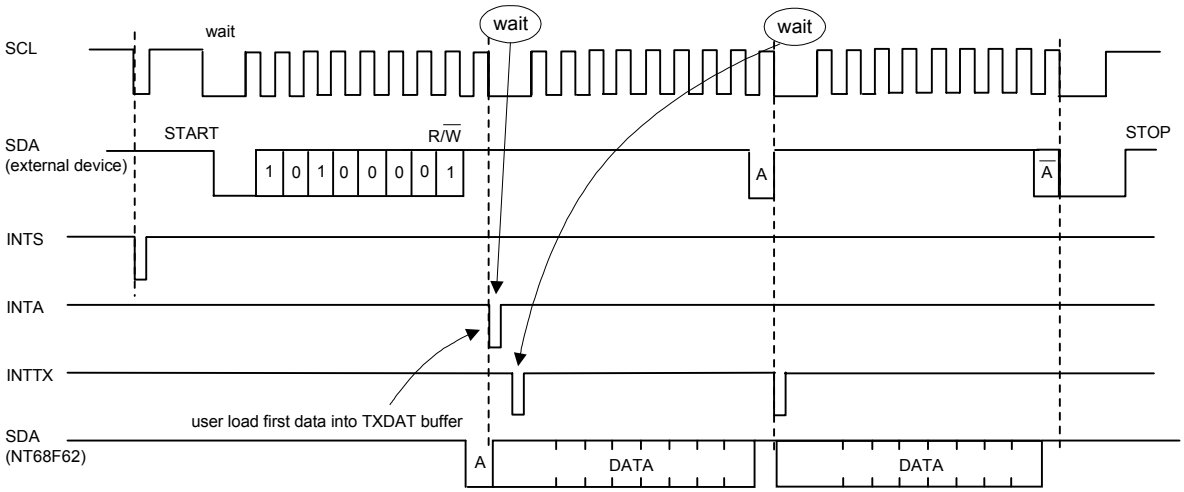

(b) READ Mode Timing Diagram

Figure 15.4. DDC2B Read Mode Spec.

15.3. DDC2B Slave Mode Bus Interface

Enable IIC and INTS: After the user clears the $\overline{\text{ENDDC}}$ to '0', NT68F62 will enter into DDC1 mode, and it will switch to DDC2B SLAVE mode when a low pulse is detected on the SCL line. The DDC2B bus consists of two wires, SCL and SDA; SCL is the data transmission clock and SDA is the data line. NT68F62 will remind the user that the mode has changed by generating an INTS interrupt. When users set MD1/$\overline{2}$ to '1' at this time, the NT68F62 will return back to DDC1 mode. (For DDC2B please refer to Figure 15.2.) The figure exhibits what isimportant in IIC: START signal, slave ADDRESS, transferred data (proceed byte by byte) and a STOP signal.

Start condition: When SCL & SDA lines are at HIGH state, an external device (master) may initiate communication by sending a START signal (defined as SDA from high to low transition while SCL is at high state). When there is a START condition, NT68F62 will set the 'START' bit to '1' and the user can poll this status bit to control the DDC2B transmission at any time. This bit will stay as '1' until the user clears it. After sending a START signal for DDC2B communication, an external device can repeatedly send a start condition without sending a STOP signal to terminate this communication. This is used by the external device to communicate with another slave or with the same slave in a different mode (Read or Write mode) without releasing the bus.

Address matched and INTA0: After the STARTcondition a slave address is sent by an external device. When the IIC bus interface changes to DDC2B mode, NT68F62 will act as a receiver first to receive this one byte data. This address data is 7 bits long followed by the eighth bit (R/W) that the system receives as an address data from an external device, and stores in the CH0RXDAT register. The system indicates the data transfer direction. The NT68F62 supports the 'A0' default address and another set of addresses that can be accessed by writing to the CH0ADDR register. The 'A0' default address of the DDC channel 0 or 1 can be disabled by bit0 or bit1 at the CH0/1_A0 control register ($3E). Upon receiving the calling address from an external device, the system will compare this received data with the default 'A0' address (if it is not disabled) and the data in the CH0ADDR register. If either of these addresses matches, the system will set the INTA0 bit in the IRQ0 register. If the user sets the INTA0 bit to '1' (in the IEIRQ0 register) in advanced and addresses match, the NT68F62 will generate an INTA0 interrupt. Under the address matching condition, the NT68F62 will send an acknowledgement bit to an external device. If the address does not match, the NT68F62 will not generate the INTA0 interrupt and will neglect the data change on the SDA line in the future.

Data transmission direction: In the INTA0 interrupt servicing routine, the user must check the LSB of the address data in the CH0RXDAT register. According to the IIC bus protocol, this bit indicates the DDC2B data transfer direction in later transmission; '1' indicates a request for a 'READ MODE' action (external master device read data from system), '0' indicates a 'WRITE MODE' action (external master device write data to system). For the timing about READ mode and WRITE mode please refer to Figure 15.3 and Figure 15.4. The data transfer can proceed byte by byte in a direction specified by the R/$\overline{\text{W}}$ bit after a successful slave address is received.
The system will switch to either 'READ' mode or 'WRITE' mode automatically whichever is determined by this direction bit.

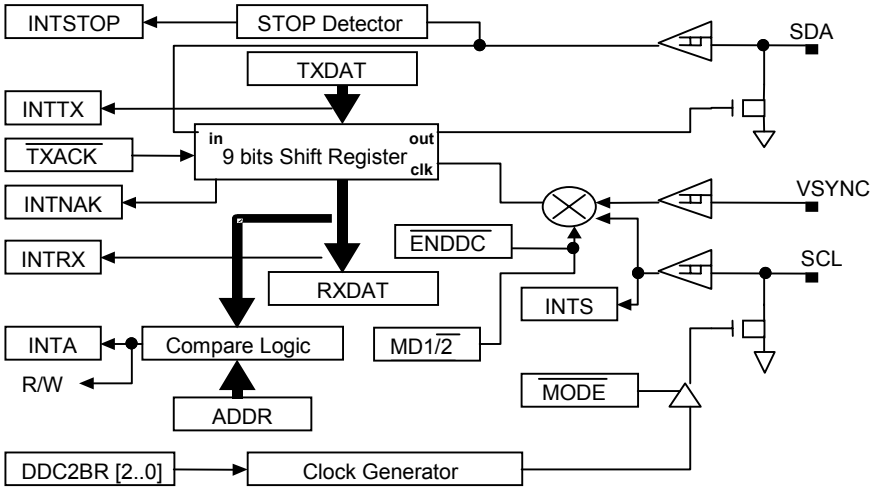

Figure 15.5. DDC Structure Block

Data transfer and wait: The data on the SDA line must be stable during the HIGH period of the clock on the SCL line. The HIGH and LOW state of the SDA line can only change when the clock signal on the SCL line is LOW. Each byte of data is eight bits long and one clock pulse for one bit of data transfer. Data is transferred with the most significant bit (MSB) first. In the wired-AND connection, any slower device can hold the SCL line LOW to force the faster device into a waiting state. Data transmission will be suspended until the slower device is ready for the next byte transfer by releasing the SCL line.

Acknowledge: The acknowledgment will be generated at the ninth clock by whomever is receiving data. In the WRITE MODE, the NT68F62 system must respond to this acknowledgment. Users should clear the $\overline{\text{TXACK}}$ bit in the CH0CON to open the 'ACK' function. After receiving one byte of data from the external device, NT68F62 will automatically send this acknowledgment bit.
In the READ mode, an external device must respond to the acknowledgment bit after every byte of data is sent out. The system will set the INTNAK bit when the external device does not send out the '0' acknowledgment bit. Furthermore, the user can open this interrupt source by clearing the INTNAK bit in the IEIRQ0 register.

The INTTX0 & INTRX0 interrupt: After NT68F62 completes one byte transmission or receiving, it will generate INTTX0 (READ mode) & INTRX0 (WRITE mode) interrupts. These interrupts are generated at the falling edge of the ninth clock. Users can control the flow of DDC2B transmissions at these interrupts.

The INTRX0 on the WRITE mode: NT68F62 reads data from the external master device. When users detect an INTRX0 interrupt, it means that one byte of data has been received and the user can read out by accessing the CH0RXDAT control register. At the same time, if the user responded to an 'ACK' signal beforehand, the shift register will send out this 'ACK' bit (low voltage) and continue to receive the next byte data. If both of the shift register and the CH0RXDAT register are full and the user still does not load data from the CH0RXDAT register, the NT68F62 system will let the SCL pin keep 'LOW' and will wait for user to retrieve this collected data. After the user obtains one byte of data from the CH0RXDAT register, the SCL will be released for generation of the SCL transmission clock. At this time , the external device can continue sending the next byte of data to NT68F62. The timing diagram refers to Figure 15.3. The user must respond with a NAK signal beforehand to stop the transmission.

The INTTX0 on the READ mode: An external device can read data from NT68F62. During INTTX0 interrupt, the system will load new data from the CH0TXDAT register which the user has earlier put into this internal shift register. Then , the system will begin to send out this new data continually . After this newly loaded data had been shifted out by every SCL clock, the system will request the user to put the next byte of data into the CH0TXDAT register by the INTTX0 interrrupt.

If both of the shift register and the CH0TXDAT register are empty and the user still cannot load data into the CH0TXDAT register, the NT68F62 system will let SCL pin keep 'LOW' and wait the another new data after receiving the acknowledgment bit from external device.

When SCL is held low by the system and after the user had put one new byte of data into the CH0TXDAT register, the SCL will be released for generation of the SCL transmission clock. At this time, the system will load this byte of data into the shift register and generate an INTTX0 interrupt again to remind the user to putt the next byte into the CH0TXDAT register. For the timing diagram refer to Figure 15.4.

After every one byte of data transfer, the system will monitor if the external master device has sent out the acknowledgment bit or not. If not, the system will set the INTNAK bit (the acknowledgment is LOW signal). Users will get an INTNAK interrupt if the INTNAK has been enabled as a interrupt source.

STOP condition: When SCL & SDA lines have been released (held on 'high' state), DDC2B data transfer is always terminated by a STOP condition generated by an external device. A STOP signal is defined as a LOW to HIGH transition of SDA while SCL is at HIGH state. When there is a STOP condition, NT68F62 will set the 'STOP' bit & INTSTOP bit to '1' and the user can poll this status bit or open a INTSTOP interrupt to control the DDC2B transmission at any time. This bit will stay as '1' until the user clears it by writing '1' to this bit. Notice: The SCL and SDA lines must conform to IIC bus specifications. For the software flowchart please refer to Figure 15.6. Please refer to the standard IIC bus specification for details.

Change to DDC1 mode: After an external device terminates DDC2 transmission by sending a STOP condition, users can set MD1/$\overline{2}$ to '1' for changing to DDC1 mode. On the other hand, when the SCL line has been released (pulled-up), the user can force NT68F62 to DDC1 mode communication at any time.

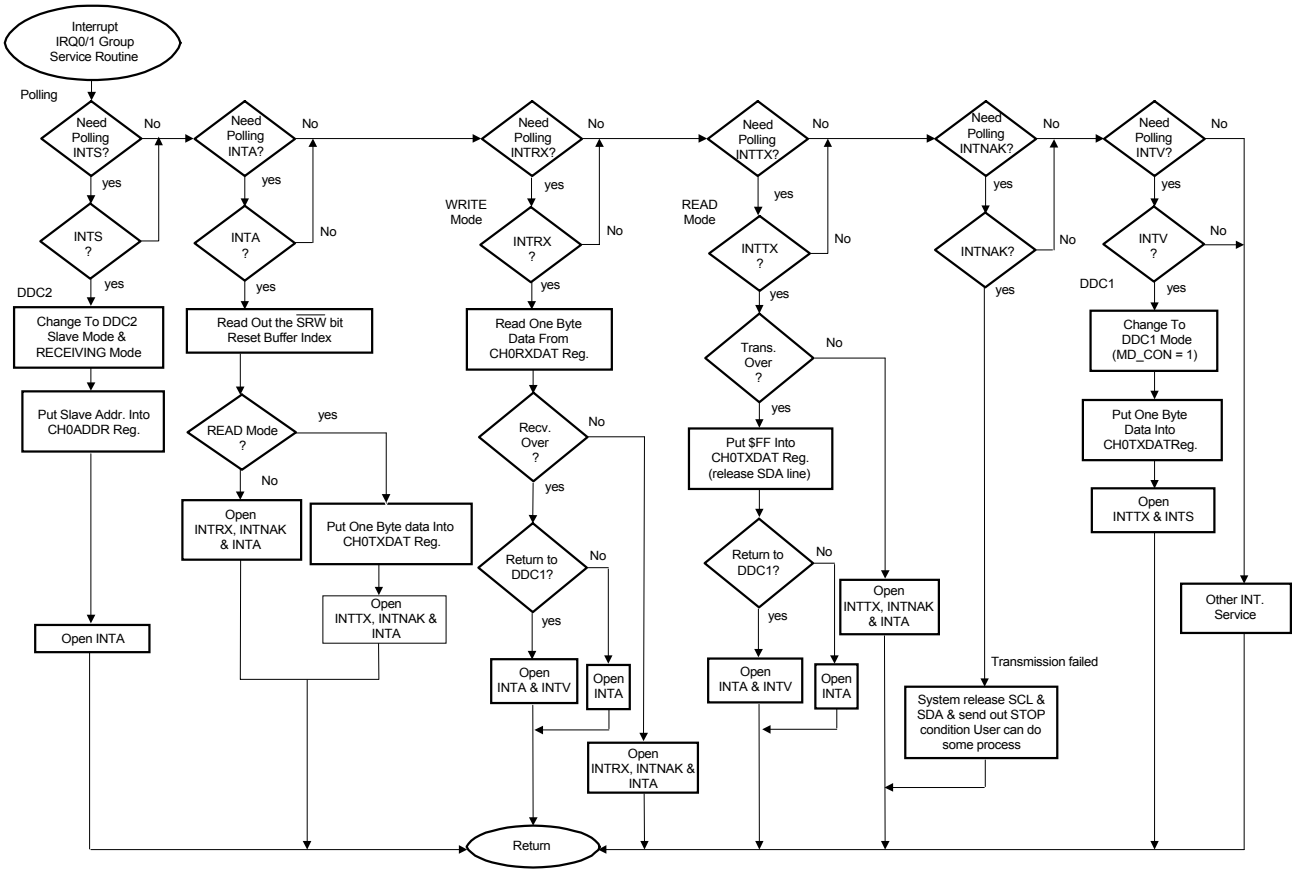

SLAVE Mode Operation

Figure 15.6. Slave Mode INT Operation

15.4 DDC2B+ Master Mode Bus Interface

Most of the DDC manipulation is the same as SLAVE mode except the SCL clock generation. In the MASTER mode, the control of the SCL clock source belongs to NT68F62. Users must set the calling address and transmission direction in advance. Access the $\overline{\text{MODE}}$ & $\overline{\text{MRW}}$ bits to control the transmission flow of DDC2B+ master mode communication.

Start condition: After user clears the $\overline{\text{ENDDC}}$ & $\overline{\text{MODE}}$ bits, the system will generate a 'START' condition on the SCL & SDA lines and wait for the user to put the calling address into the TXDAT buffer and send it to SDA line. The frequency of SCL is dependant on the baud-rate setting value (DDCBR0 - DDCBR2) in the register CH0CLK. The data transmission direction will be dependant on the $\overline{\text{MRW}}$ bit and the LSB of the calling address, '1' for read operation and '0' for write operation.

Calling address: The calling address is 8 bits long. It should be put in the CH0TXDAT. The setting of the LSB bit in this TXDAT buffer should be the same as the $\overline{\text{MRW}}$ bit.

STOP condition: There are several cases in which the system will send out a 'STOP' condition on the SCL & SDA lines. First, in the 'READ' operation, if the user sets the TXACK bit to '1', the system will send out the 'NAK' condition on the bus after receiving one byte of data and will then send out the 'STOP' condition automatically later. Second, in the 'START' condition and after the sending out a calling address, if no slave has responded to an 'ACK' signal, the master will send out the 'STOP' condition automatically. Third, if the user sets the $\overline{\text{MODE}}$ bit to '1', the system will generate a 'STOP' condition after the current byte transmission is done. Notice that if the slave device did not release the SCL and SDA line, the system can not send out the 'STOP' condition.
After the 'STOP' condition, the master will release the SCL & SDA lines and return to SLAVE mode.

The INTTX0 & INTRX0 interrupt: After NT68F62 completes one byte transmission or receiving of data, it will generate INTTX0 (WRITE mode) & INTRX0 (READ mode) interrupts. Users can control the flow of DDC2B transmission at these interrupts.

The INTRX0 on the read mode: NT68F62 reads data from an external slave device. When users detect an INTRX0 interrupt, it means that one byte data has been received and the user can read out by accessing CH0RXDAT control register. At the same time, if the user sent an 'ACK' signal beforehand, the shift register will send out an 'ACK' bit (low voltage) and continue to receive the next byte of data. If both the shift register and the CH0RXDAT register are full and the user still does not load data from the CH0RXDAT register, the SCL will be held LOW and will wait for NT68F62. After the user has received one byte of data from the CH0RXDAT register, the SCL will be released for generation of SCL transmission clock. An external device can continue sending the next byte of data to NT68F62. Refer to Figure 15.7 for the timing diagram. The user must respond to a NAK signal in advance to stop the transmission. Before the last two bytes of data are received, the user should respond with a 'NAK' signal. Then, the system will send out a 'NAK' bit after receiving the last byte of data and enact the 'STOP' condition to notify the slave that current transmission is terminated.

The INTTX0 on the WRITE mode: The external device reads data from NT68F62. During an INTTX0 interrupt, the system will load new data (that the user has already put into the internal shift register) from the CH0TXDAT register and continue sending out this new data. After this new loading data has been shifted out by every SCL clock, the system will request the user to put the next byte of data into the CH0TXDAT register.

If both of the shift register and the CH0TXDAT register are empty and the user still cannot load data into the CH0TXDAT register, the NT68F62 system will let SCL pin keep 'LOW' and wait the another new data after receiving the acknowledgment bit from external device.

If SCL is held low by the system, and the user has put one new byte of data into the CH0TXDAT register, the SCL will be released for generation of SCL transmission clock. At this time, the system will load this byte of data into the shift register and generate an INTTX0 interrupt again to remind the user to put the next byte into the CH0TXDAT register. Refer to Figure 15.8 for the timing diagram.

Repeat start condition: If the user clears the $\overline{\text{RSTART}}$ bit to '0' in the ' WRITE' operation, the system will send out a 'Repeat Start'. Notice that if the slave device does not release the SCL and SDA lines, the system can not send out a 'REPEAT START condition.

SCL baud rate selection: There are three Baud Rate bits for users to select one of eight clock rates on the SCL line. After a system reset, the default value of these Baud Rate bits (DDC2BR0-2) are '111'.

DDC2BR2	DDC2BR1	DDC2BR0	Baud Rate
0.00	0.00	0.00	400K
0.00	0.00	1.00	200K
0.00	1.00	0.00	100K
0.00	1.00	1.00	50K
1.00	0.00	0.00	25K
1.00	0.00	1.00	12.5K
1.00	1.00	0.00	6.25K
1.00	1.00	1.00	3.125K

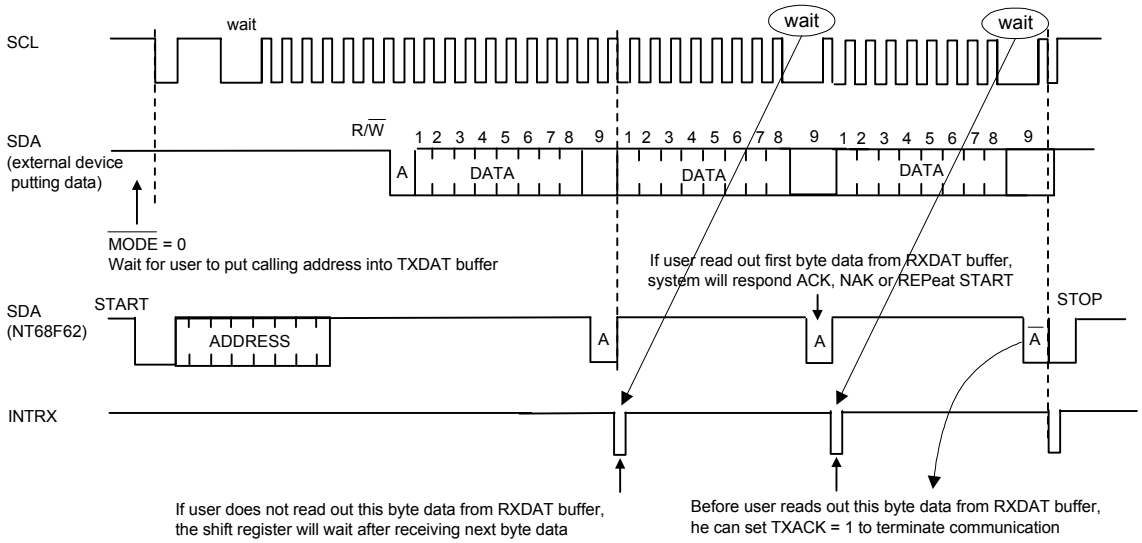

Figure 15.7. DDC2B+ MASTER READ Mode Timiing

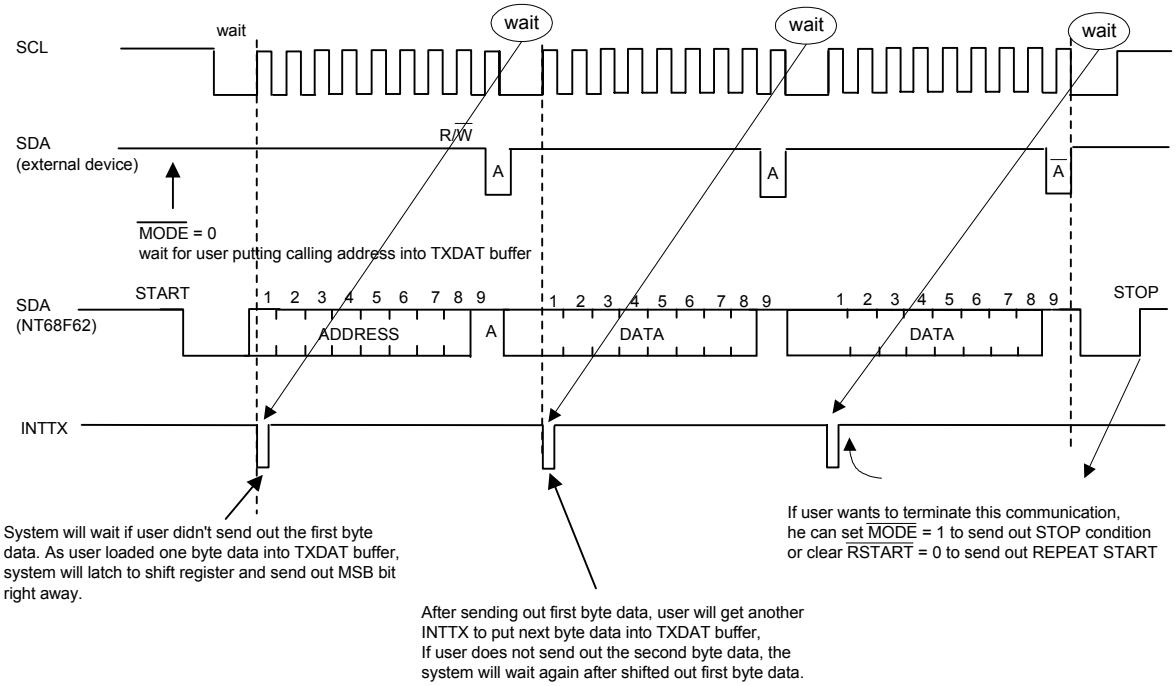

Figure 15.8. DDC2B+ MASTER WRITE Mode Timing

Control Register:

Addr	Register	INIT	Bit7	Bit6	Bit5	Bit4	Bit3	Bit2	Bit1	Bit0	R/W
Control Register for Polling Interrupt Groups											
$0016	NMIPOLL	00H	—	—	—	—	—	—	INTE0	INTMUTE	R
			—	—	—	—	—	—	CLRE0	CLRMUTE	W
$0017	IRQPOLL	00H	—	—	—	—	—	IRQ2	IRQ1	IRQ0	R
Control Registers of Interrupt Enable											
$0018	IENMI	00H	—	—	—	—	—	—	INTE0	INTMUTE	W
$0019	IEIRQ0	00H	—	—	INTS0	INTA0	INTTX0	INTRX0	INTNAK0	INTSTOP0	W
$001A	IEIRQ1	00H	—	—	INTS1	INTA1	INTTX1	INTRX1	INTNAK1	INTSTOP1	W
$001B	IEIRQ2	00H	—	—	—	—	—	INTV	INTE1	INTMR	W
Control Registers for Polling Interrupt Requests											
$001C	IRQ0	00H	—	—	INTS0	INTA0	INTTX0	INTRX0	INTNAK0	INTSTOP0	R
			—	—	CLRS0	CLRA0	CLRTX0	CLRRX0	CLRNAK0	CLRSTOP0	W
$001D	IRQ1	00H	—	—	INTS1	INTA1	INTTX1	INTRX1	INTNAK1	INTSTOP1	R
			—	—	CLRS1	CLRA1	CLRTX1	CLRRX1	CLRNAK1	CLRSTOP1	W
$001E	IRQ2	00H	—	—	—	—	INTADC	INTV	INTE1	INTMR	R
			—	—	—	—	CLRADC	CLRV	CLRE1	CLRMR	W
Control Register for DDC1/2B+ of Channel 0											
$0021	CH0ADDR	A0H	ADR7	ADR6	ADR5	ADR4	ADR3	ADR2	ADR1	—	W
$0022	CH0TXDAT	00H	TX7	TX6	TX5	TX4	TX3	TX2	TX1	TX0	W
$0023	CH0RXDAT	00H	RX7	RX6	RX5	RX4	RX3	RX2	RX1	RX0	R
$0024	CH0CON	E0H	$\overline{\text{ENDDC}}$	MD1/$\overline{2}$	—	START	STOP	—	$\overline{\text{TXACK}}$	—	W
			—	—	$\overline{\text{SRW}}$	START	STOP	—	—	—	R
$0025	CH0CLK	FFH	$\overline{\text{MODE}}$	$\overline{\text{MRW}}$	$\overline{\text{RSTART}}$	—	—	DDC2BR2	DDC2BR1	DDC2BR0	W
Control Register for DDC1/2B+ of Channel 1											
$0026	CH1ADDR	A0H	ADR7	ADR6	ADR5	ADR4	ADR3	ADR2	ADR1	—	W
$0027	CH1TXDAT	00H	TX7	TX6	TX5	TX4	TX3	TX2	TX1	TX0	W
$0028	CH1RXDAT	00H	RX7	RX6	RX5	RX4	RX3	RX2	RX1	RX0	R
$0029	CH1CON	E0H	$\overline{\text{ENDDC}}$	MD1/$\overline{2}$	—	START	STOP	—	$\overline{\text{TXACK}}$	—	W
			—	—	$\overline{\text{SRW}}$	START	STOP		—	—	R
$002A	CH1CLK	FFH	$\overline{\text{MODE}}$	$\overline{\text{MRW}}$	$\overline{\text{RSTART}}$	—	—	DDC2BR2	DDC2BR1	DDC2BR0	W

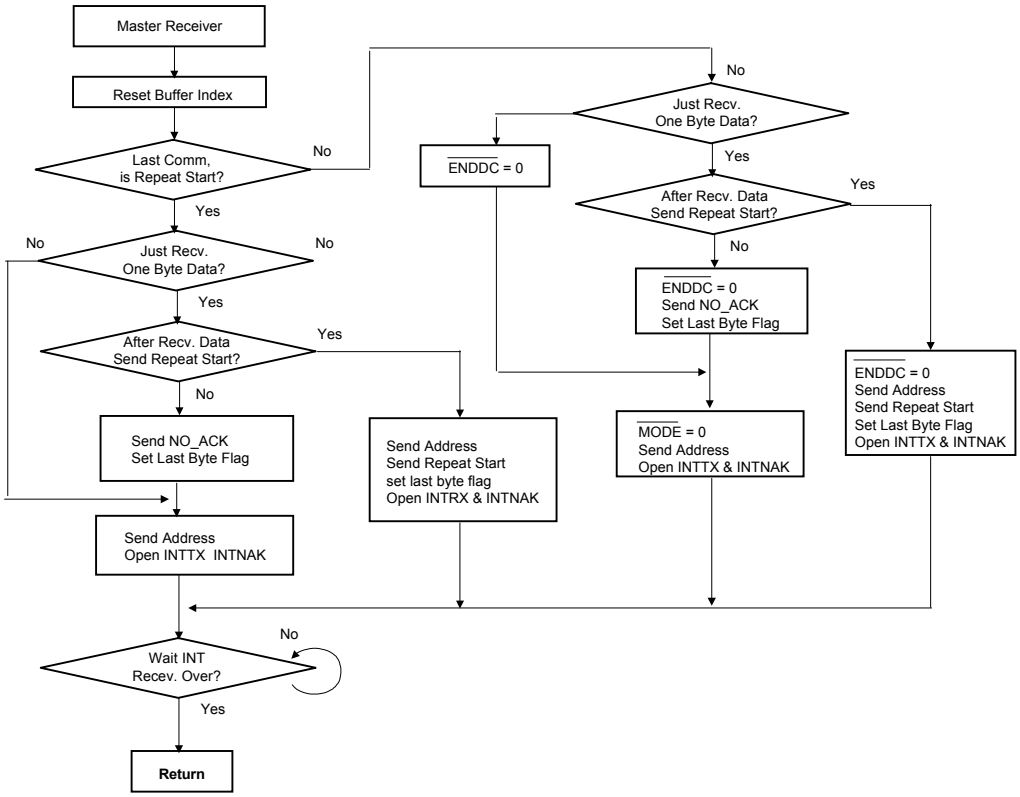

Figure 15.9. Master Receiver Operation

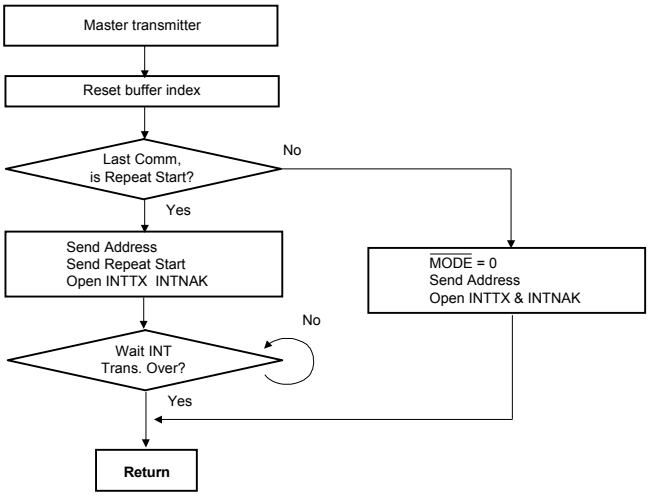

Figure 15.10. Master Transmitter Operation

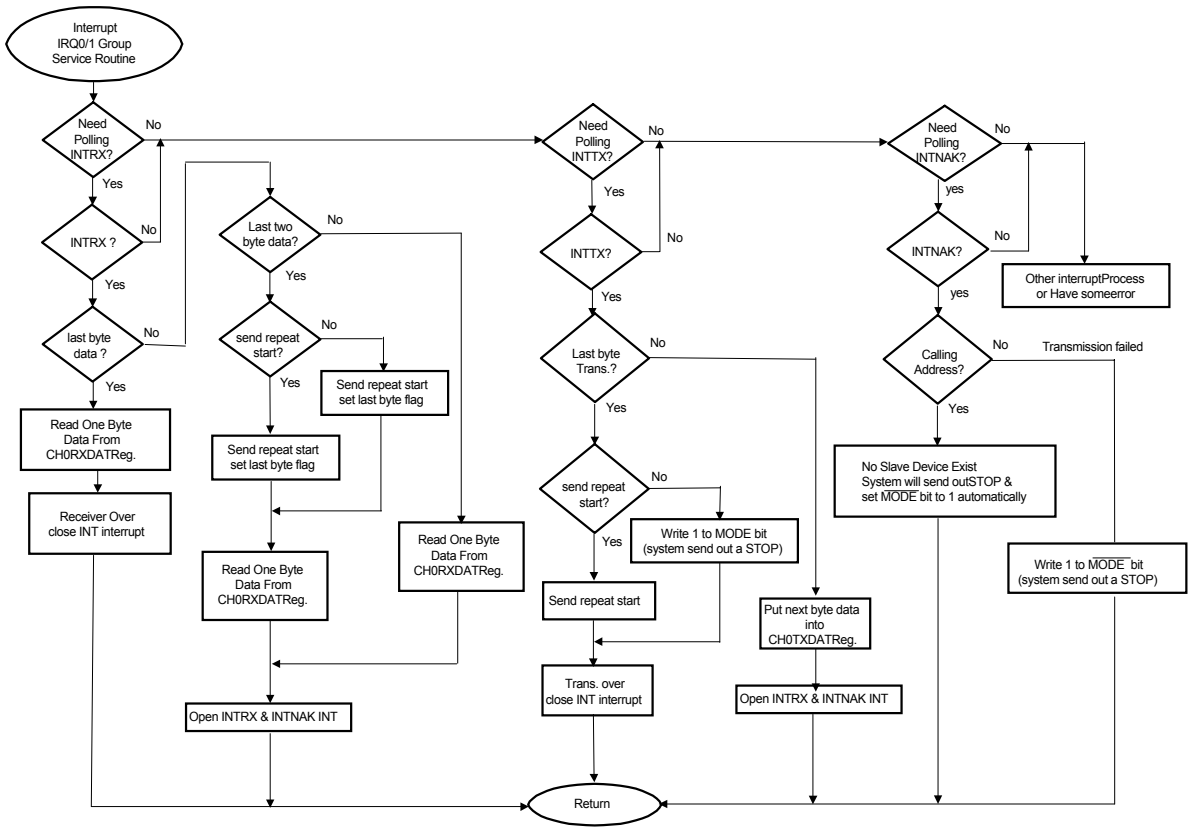

Figure 15.11. Master Mode INT Operation

User Referenced Flow Chart

Comparison With NT68P61A

Item	NT68P61A Status	NT68F62 Status	Notes
Maximum ROM Size	24K Bytes	32K Bytes	
RAM Size	256 Bytes	512 Bytes	
PWM Channel	14 channels 5V & 12V Open Drain O/P	13 channels 5V Open Drain O/P Only	
PWM Channel Refresh Rate	31.25 KHz	62.5 KHz	
A/D Converter Channel	2 channels	4 channels	6 bit resolution
V Counter Bit No.	12 Bits (handle Vsync freq. down to 30.5Hz)	14 Bits (handle Vsync freq. down to 7.6Hz)	
H Interval	8.192 ms	16.384 & 32.768 ms	
Auto Mute	X	O	
Free Run Freq.	2 sets	5 sets	
Self Test Pattern	X	O	2 self test patterns
IIC Bus Channel	1 channel	2 channels	
IIC Bus Baud Rate	Max 100KHz	Max 400KHz	
IIC Mode Supported	DDC1/2B	DDC1/2B+	
External Interrupt	1 set	2 sets	
NMI Interrupt	X	O	
Interrupt Trigger Edge Programmable	X	O	
MASK ROM option	24K	32K	

DC Electrical Characteristics (V_{DD} = 5V, T_A = 25°C, Oscillator freq. = 8MHz, Unless otherwise specified)

Symbol	Parameter	Min.	Typ.	Max.	Unit	Conditions
I_{DD}	Operating Current			20	mA	No Loading
V_{IH1}	Input High Voltage	2			V	P00-P07, P12-P16, P20-P27, P40, P41 $\overline{RESET}$, HALFHI INTE0, INTE1
V_{IH2}	Input High Voltage	3			V	SCL0/1, SDA0/1,P10, P11, P30, P31 pins
V_{IL1}	Input Low Voltage			0.8	V	P00-P07, P12-P16, P20-P27, P40, P41 $\overline{RESET}$, HALFHI, INTE0, INTE1
V_{IL2}	Input Low Voltage			1.5	V	SCL0/1, SDA0/1, P10, P11 P30 ,P31 pins
I_{IH}	Input High Current		-200	-350	μA	P00-P07, P10-P16, P20-P27, P40,P41 VSYNCI, HSYNCI, HALFHI, $\overline{RESET}$ (V_{IH}=2.4V);
V_{OH1}	Output High Voltage	2.4			V	P00-P07, P10-P16, P40, P41 (I_{OH} = -100μA) VSYNCO, HSYNCO (I_{OH} = -4mA) HALFHO (I_{OH} = -4mA) PATTERN, P20-P27 (I_{OH} = -10mA)
V_{OH2}	Output High Voltage (DAC0-DAC12)			5	V	External applied voltage
V_{OL}	Output Low Voltage			0.4	V	P00-P07, P10-P16, P40, P41, DAC0-12 (I_{OL}= 4mA) SCL0/1, SDA0/1 (I_{OL}= 5mA) VSYNCO, HSYNCO (I_{OL} = 4mA) HALFHO (I_{OL} = 4mA) PATTERN, P20-P27 (I_{OL}= 10mA)
R_{OL}	Pull Down Resistor (RESET)	25	50		KΩ	
R_{OH1}	Pull up Resistor (INTE0, INTE1)	11	22	33	KΩ	
R_{OH2}	Pull up Resistor (PORT0, PORT1, & PORT4)	11	22	33	KΩ	
VIH	Input High Voltage		2.2		V	HSYNCI,VSYNCI
VIL	Input Low Voltage		1.2		V	
$V_{jitterH}$	Input Jitter Low Voltage	1.6		2.0	V	HSYNCI
$V_{jitterL}$	Input Jitter High Voltage	1.0		1.4	V	HSYNCI

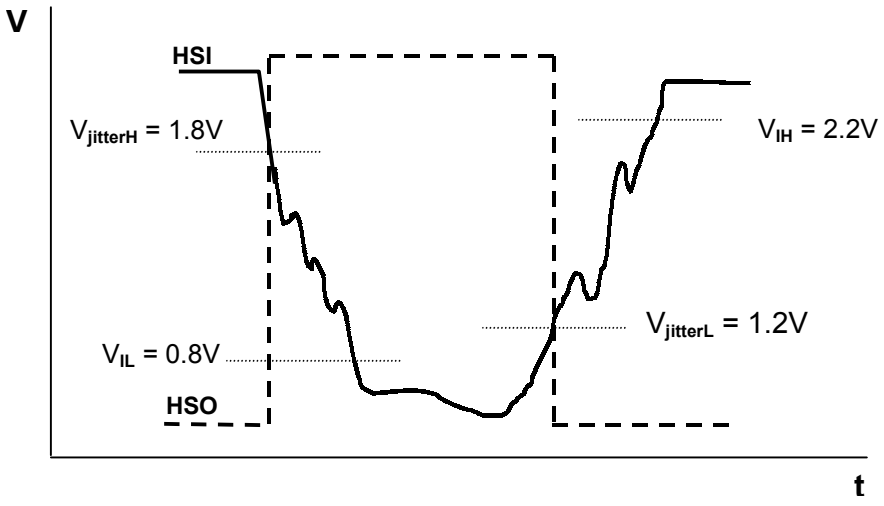
V
HSI
$V_{jitterH}$ = 1.8V
V_{IH} = 2.2V
$V_{jitterL}$ = 1.2V
V_{IL} = 0.8V
HSO
t

AC Electrical Characteristics (V_{DD} = 5V, T_A = 25°C, Oscillator freq.= 8MHz, unless otherwise specified)

Symbol	Parameter	Min.	Typ.	Max.	Unit	Conditions
Fsys	System Clock		8		MHz	
t_{CNVT}	A/D Conversion Time			750	µs	
Voffset	A/D Converter Error			1	LSB	
Vlinear	A/D Input Dynamic Range of Linearity Conversion	1.5		3.5	V	
t_{DELAY}	The Delay Time of Vsync input and Vsync output			20	ns	Composite sync with fixed delay (Refer Figure 13.5)
t_{RESET}	Reset Pulse Width Low	2			t_{CYCLE}	t_{CYCLE} = 2/ Fsys
Fvsync	Vsync Input Frequency	8		25K	Hz	t_{VSYNC} = 1/Fvsync
t_{VPW}	Vsync Input Pulse Width	8		300	µs	
Fhsync	Hsync Input Frequency	30		120	KHz	t_{HSYNC} = 1/Fhsync
t_{HPW1}	Maximum Pulse Width of Hsync Input High (Positive Polarity)	0.25		7	µs	
t_{HPW2}	Minimum Pulse Width of Hsync Input Low (Positive Polarity)	9.125			µs	
t_{ERROR1}	Counting Deviation of Base Timer			1	µs	1µs clock source
t_{ERROR2}	Counting Deviation of Base Timer			1	ms	1ms clock source

DDC1 Mode

Symbol	Parameter	Min.	Typ.	Max.	Unit	Conditions
t_{VPW}	Vsync High Time	0.50		300	µs	
Fvsync	Vsync Input Frequency	32		25K	Hz	t_{VSYNC} =1/Fvsync
t_{DD}	Data Valid	200		500	ns	
t_{MODE}	Time for Transition to DDC2B Mode			500	ns	

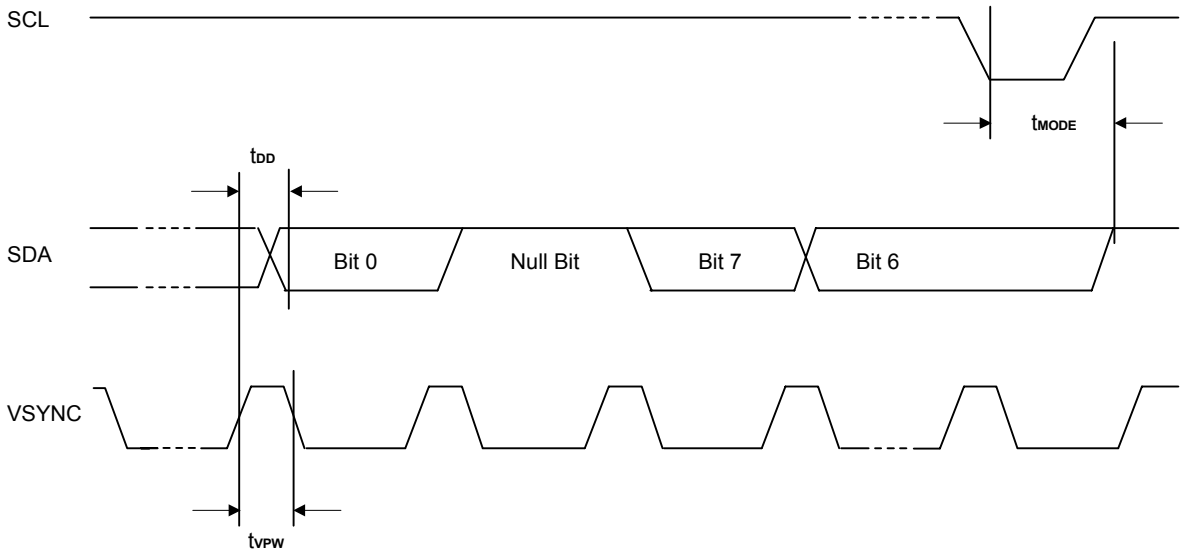

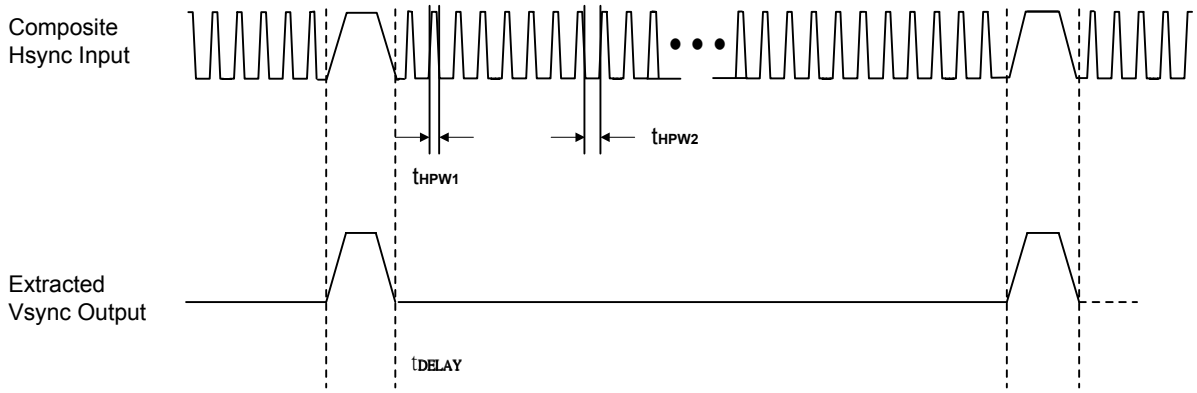

DDC2B+ Mode

Symbol	Parameter	Min.	Typ.	Max.	Unit
f_{SCL}	SCL Clock Frequency			400	KHz
t_{BUF}	Bus Free Between a STOP and START Condition	4.7			µs
t_{HD}; STA	Hold Time for START Condition	0.8			µs
t_{LOW}	LOW Period of the SCL Clock	1.3			µs
t_{HIGH}	HIGH Period of the SCL Clock	0.8			µs
t_{SU}; STA	Set-up Time for a Repeated START Condition	1.3			µs
t_{HD}; DAT	Data Hold Time	200			ns
t_{SU}; DAT	Data Set-up Time	300			ns
t_R	Rising Time of Both SDA and SCL Signals			1	µs
t_F	Falling Time of Both SDA and SCL Signals			300	ns
t_{SU}; STO	Set-up Time for STOP Condition	0.80			µs

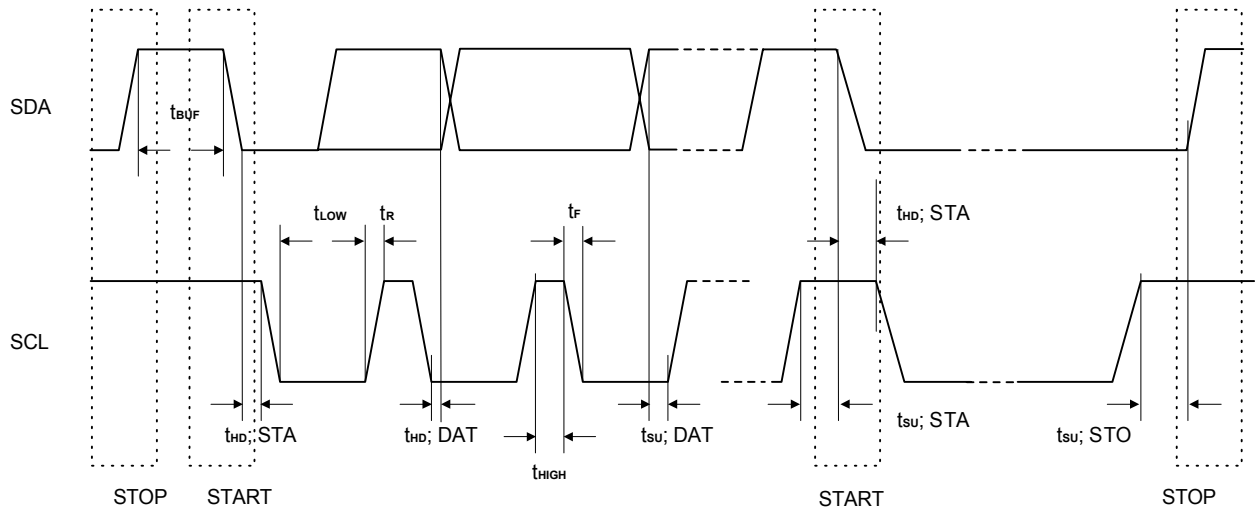

Ordering Information

Part No.	Packages
NT68F62	40L P-DIP
NT68F62U	42L S-DIP

Package Information

P-DIP 40L Outline Dimensions

unit: inches/mm

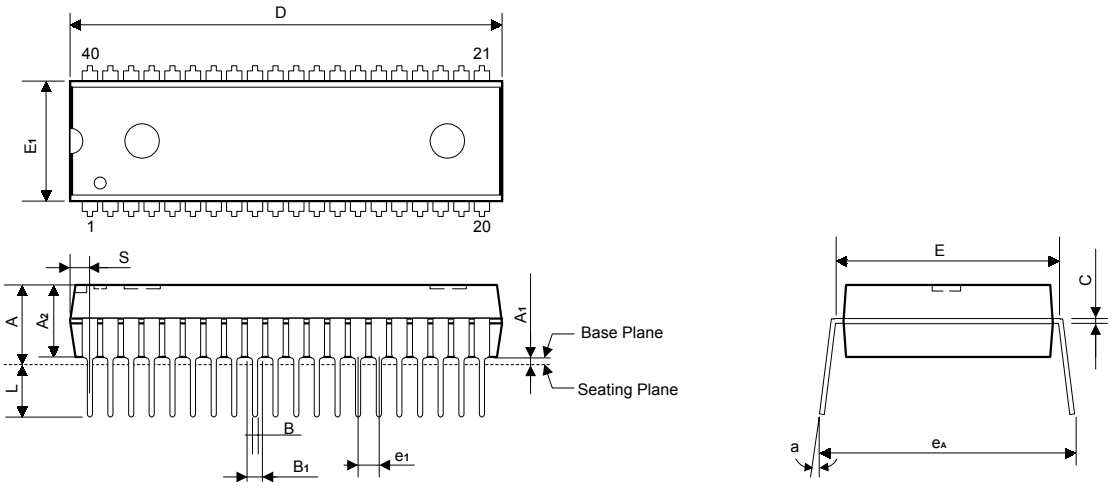

Symbol	Dimensions in inches	Dimensions in mm
A	0.210 Max.	5.33 Max.
A_1	0.010 Min.	0.25 Min.
A_2	0.155±0.010	3.94±0.25
B	0.018 +0.004 -0.002	0.46 +0.10 -0.05
B_1	0.050 +0.004 -0.002	1.27 +0.10 -0.05
C	0.010 +0.004 -0.002	0.25 +0.10 -0.05
D	2.055 Typ. (2.075 Max.)	52.20 Typ. (52.71 Max.)
E	0.600±0.010	15.24±0.25
E_1	0.550 Typ. (0.562 Max.)	13.97 Typ. (14.27 Max.)
e_1	0.100±0.010	2.54±0.25
L	0.130±0.010	3.30±0.25
α	0° ~ 15°	0° ~ 15°
e_A	0.655±0.035	16.64±0.89
S	0.093 Max.	2.36 Max.

Notes:

1. The maximum value of dimension D includes end flash.
2. Dimension E_1 does not include resin fins.
3. Dimension S includes end flash.

Package Information

S-DIP 42L Outline Dimensions

unit: inches/mm

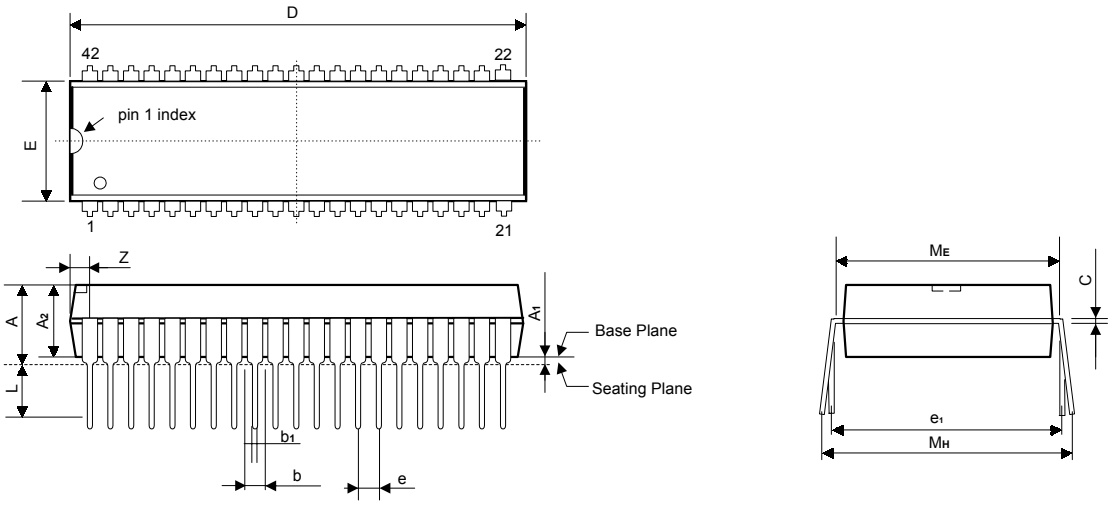

Symbol	Dimensions in inches	Dimensions in mm
A	0.200 Max.	5.08 Max.
A_1	0.020 Min.	0.51 Min.
A_2	0.157 Max.	4.0 Max.
b	0.051 Max. 0.031 Min.	1.3 Max. 0.8 Min.
b_1	0.021 Max. 0.016 Min.	0.53 Max. 0.40 Min.
c	0.013 Max. 0.010 Min.	0.32 Max. 0.23 Min.
D(1)	1.531 Max. 1.512 Min.	38.9 Max. 38.4 Min.
E(1)	0.551 Max. 0.539 Min.	14.0 Max. 13.7 Min.
e	0.070	1.778
e_1	0.600	15.24
L	0.126 Max. 0.114 Min.	3.2 Max. 2.9 Min.
M_E	0.622 Max. 0.600 Min.	15.80 Max. 15.24 Min.
M_H	0.675 Max. 0.626 Min.	17.15 Max. 15.90 Min.
w	0.007	0.18
Z(1)	0.068 Max.	1.73 Max.

Notes:

1. Plastic or metal protrusions of 0.25 mm maximum per side are not included.