M58480P, M58484P

30-FUNCTION REMOTE-CONTROL TRANSMITTERS

DESCRIPTION

The M58480P and M58484P are 30-function remote-control transmitter circuits manufactured by aluminum-gate CMOS technology for use with in television receivers, audio equipment and the like, using infrared for transmission. They convey 30 different commands on the basis of a 6-bit PCM code. In the M58480P, entry priority is given to the first key pushed, while in the M58484P each key has an assigned priority. These transmitters are intended to be used in conjunction with an M58481, M58485P or M58487P receiver.

FEATURES

- Single power supply
- Wide supply voltage range: 2.2V 8V
- Low power dissipation:
  Non-operating condition (V_{DD}=3V) : 3nW (typ)
  : 3μW (max)
- On-chip oscillator
- Low-cost LC/L or ceramic oscillator used in determining reference frequency (480 kHz or 455 kHz)
- Low external component count
- Low transmitter duty cycle (3.6%) for minimal power consumption

APPLICATIONS

- Remote-control transmitters for TV and other applications

PIN CONFIGURATION (TOP VIEW)

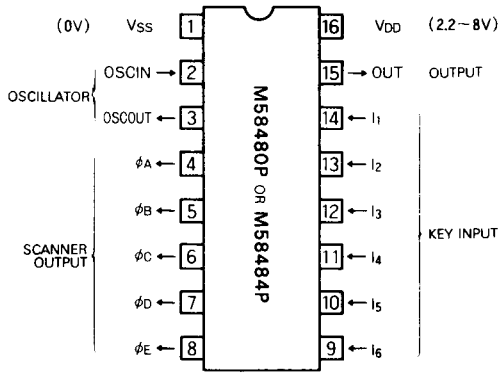

Outline 16P4

FUNCTION

The M58480P and M58484P transmitter circuits for infrared remote-control systems consist of an oscillator, a timing generator, a scanner, a key-in encoder, an instruction decoder, a code modulator, and an output buffer. With a 6 x 5 keyboard matrix, 30 commands can be transmitted by 6-bit PCM code. Oscillation is stopped when none of the keys are depressed, to minimize power consumption.

BLOCK DIAGRAM

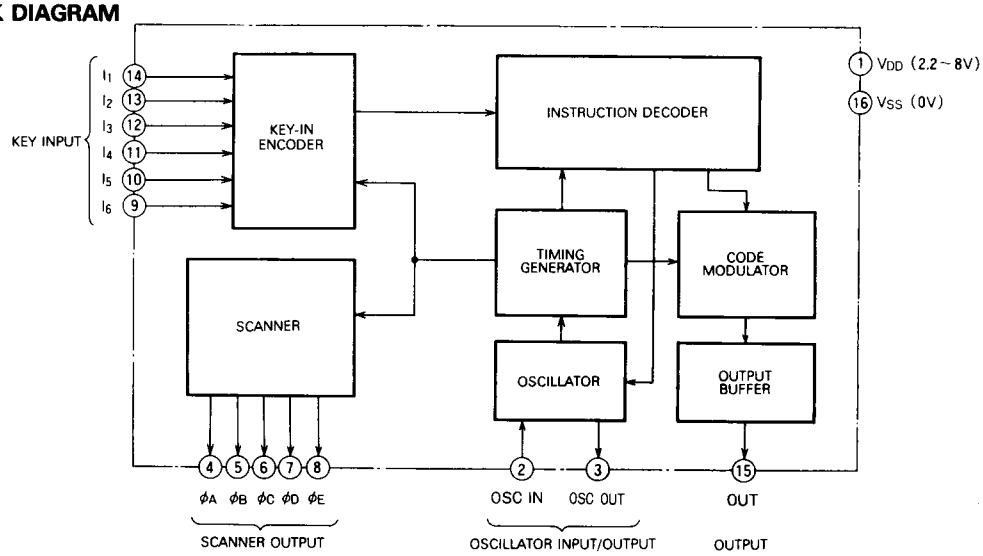

30-FUNCTION REMOTE-CONTROL TRANSMITTERS

FUNCTIONAL DESCRIPTION

Oscillator

As the oscillator is on chip, oscillation frequency is easily obtained by connecting an external LC network or ceramic resonator between the OSC IN and OSC OUT terminals. Figs. 1 and 2 show typical oscillators.

Fig. 1 An example of an oscillator (using a ceramic resonator)

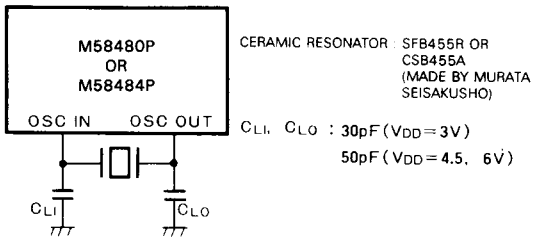

Fig. 2 An example of an oscillator (using an LC network)

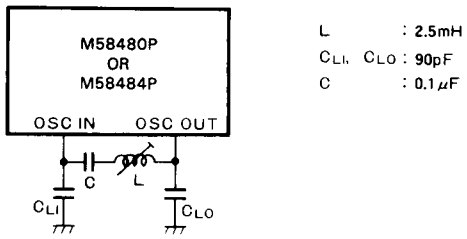

Setting the oscillation frequency to 480 kHz (or 455 kHz) will also set the signal transmission carrier wave to 40 kHz (or 38 kHz).

Power consumption is minimized by stopping oscillation in the oscillator when none of the keys are depressed.

Key Input

Thirty different commands can be input by a 6 x 5 keyboard matrix consisting of inputs $I_1 \sim I_6$ and scanner outputs $\phi A \sim \phi E$.

In the M58480P, key with first-key entry is given priority, and next-key entry is not allowed unless all keys are released.

In the M58484P, with assigned priority, simultaneous depression of more than two keys makes the key with higher priority effective. Order of key priority for scanner outputs is ϕA, ϕB, ϕC, ϕD, and ϕE, and in the same scanner output, I_1, I_2, I_3, I_4, I_5, and I_6.

When more than two keys are depressed at the same time, however, commands may not function due to short-circuiting among scanner outputs.

Table 1 shows the relationship between the keyboard matrix and the transmission commands.

Table 1 Relation between the keyboard matrix and the transmission commands

Key input \ Scanner output	ϕE	ϕD	ϕC	ϕB	ϕA
I_1	CH1	CH2	CH3	CH4	POWER ON/OFF
I_2	CH5	CH6	CH7	CH8	CH UP
I_3	CH9	CH10	CH11	CH12	CH DOWN
I_4	CH13	CH14	CH15	CH16	VO UP
I_5	BR UP	BR DOWN	BR 1/2	MUTE	VO DOWN
I_6	CS UP	CS DOWN	CS 1/2	CALL	VO 1/3

Transmission Commands

Table 2 shows the 30 commands that can be transmitted by 6-bit PCM codes ($D_1 \sim D_6$).

The code 000000 is not assigned for preventing error operations.

Table 2 Relation between the commands and the transmission codes

Transmission code D_1	D_2	D_3	D_4	D_5	D_6	Function	Remarks
1	0	0	0	0	0	CH UP	Analog control
0	1	0	0	0	0	CH DOWN	
1	1	0	0	0	0	VO UP	
0	0	1	0	0	0	VO DOWN	
1	0	1	0	0	0	BR UP	
0	1	1	0	0	0	BR DOWN	
1	1	1	0	0	0	CS UP	
0	0	0	1	0	0	CS DOWN	
1	0	0	1	0	0	MUTE	
0	1	0	1	0	0	VO(1/3)	Normalization of analog
1	1	0	1	0	0	BR(1/2)	
0	0	1	1	0	0	CS(1/2)	
1	0	1	1	0	0	CALL	
0	1	1	1	0	0	POWER ON/OFF	
0	0	0	0	1	0	CH 1	Channels selected directly
1	0	0	0	1	0	CH 2	
0	1	0	0	1	0	CH 3	
1	1	0	0	1	0	CH 4	
0	0	1	0	1	0	CH 5	
1	0	1	0	1	0	CH 6	
0	1	1	0	1	0	CH 7	
1	1	1	0	1	0	CH 8	
0	0	0	1	1	0	CH 9	
1	0	0	1	1	0	CH 10	
0	1	0	1	1	0	CH 11	
1	1	0	1	1	0	CH 12	
0	0	1	1	1	0	CH 13	
1	0	1	1	1	0	CH 14	
0	1	1	1	1	0	CH 15	
1	1	1	1	1	0	CH 16	

Transmission Coding

When oscillation frequency f_{OSC} is 480kHz, transmission of data code is executed as follows: when f_{OSC} is other than 480 kHz, period is multiplied by 480 kHz/f_{OSC} and its frequency by f_{OSC}/480 kHz.

A single pulse is amplitude-modulated by a carrier of 40 kHz, and the pulse width is 0.5ms. Therefore a single pulse consists of 20 clock pulses of 40kHz (see Fig. 3).

The distinction between "0" and "1" bits is made by the pulse interval between pulses, with a 2msec interval corresponding to "0", and a 4msec interval representing "1" (Fig. 4).

One command word is composed of 6 bits, that is, of 7 pulses, and it is transmitted in the 48ms cycle while a matrix switch is depressed.

As mentioned above, adoption of this code means that the period during which output is high (i.e. signal emitting LED is lit) is shorter than in continuous wave transmission. Indeed the LED is on for only half the 7-pulse period or 1.75ms, which is 3.6% of the 48ms entire cycle. This not only saves in total power consumption, but it also improves LED reliability. Put another way, emission can be increased on the same power consumption.

Fig. 3 A single pulse modulated onto carrier (40kHz)

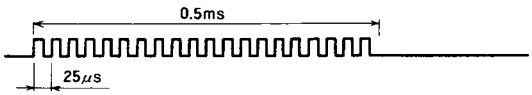

Fig. 4 Distinction between the bits "1" and "0"

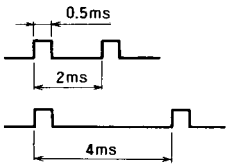

Fig. 5 Synthesis of one word (the code below shows 010100)

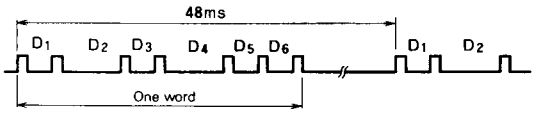

APPLICATION EXAMPLE

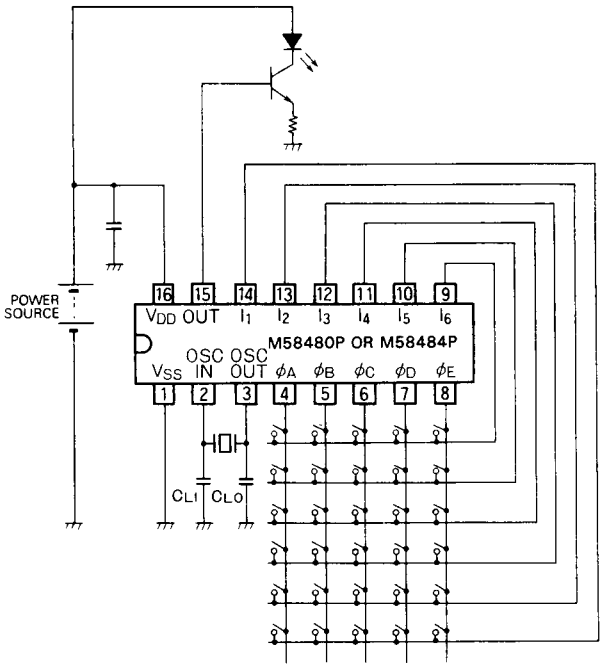

30-FUNCTION REMOTE-CONTROL TRANSMITTERS

ABSOLUTE MAXIMUM RATINGS

Symbol	Parameter	Conditions	Limits	Unit
V_{DD}	Supply voltage	With respect to V_{SS}	−0.3 ~ 9	V
V_I	Input voltage		$V_{SS} \leq V_I \leq V_{DD}$	V
V_O	Output voltage		$V_{SS} \leq V_O \leq V_{DD}$	V
P_d	Maximum power dissipation	Ta = 25℃	300	mW
T_{opr}	Operating free-air temperature range		−30 ~ 70	℃
T_{stg}	Storage temperature range		−40 ~ 125	℃

RECOMMENDED OPERATING CONDITIONS

Symbol	Parameter	Limits			Unit
		Min	Nom	Max	
V_{DD}	Supply voltage	2.2		8	V
f_{osc}	Oscillation frequency		455		kHz
			480		kHz

ELECTRICAL CHARACTERISTICS (Ta = 25℃, unless otherwise noted)

Symbol	Parameter	Test conditions		Limits			Unit
				Min	Typ	Max	
V_{DD}	Operational supply voltage	Ta = −30 ~ 70℃, f_{osc} = 455kHz		2.2		8	V
I_{DD}	Supply voltage during operation	f_{osc} = 455kHz	V_{DD} = 3 V		0.1	0.5	mA
			V_{DD} = 6 V		0.5	2	mA
I_{DD}	Supply voltage during non-operation	V_{DD} = 3 V				1	μA
		V_{DD} = 8V				5	μA
R_I	Pull-up resistances, I_1 ~ I_6				20		kΩ
I_{OL}	Low-level output currents, ϕ_A ~ ϕ_E	V_{DD} = 3 V, V_O = 3 V		0.2	0.5		mA
		V_{DD} = 6 V, V_O = 6 V		1	2		mA
I_{OH}	High-level output current, OUT	V_{DD} = 3 V, V_O = 0 V		−5	−10		mA
		V_{DD} = 6 V, V_O = 0 V		−15	−30		mA