MTC-30522

VAN Interface

Data Sheet

Application Specific Standard Products

Features

- **Line Interface Circuit for Automotive Multiplex Systems**
- **Fully Integrated Support for the VAN Protocol (layer 1 of the OSI model)**
- **Integrates:**
  - **Interface protection**
  - **Line biasing**
  - **Transmitter**
  - **Receiver**
  - **Watchdog function**
  - **Power on reset**
- **Hardware Support for Bus Collision Detection**
- **Data Rates from 10k to 160kbits/second**
- **Multi-Master / Multi-Slave Configurations, as well as Master-Slave**
- **Integrated Protection against Automotive Interference Pulses, including Load-dump**
- **High-voltage BICMOS Technology**

Product Description

The chip is designed to be used in a car multiplexing system in bus collision mode, using the VAN protocol according to ISO standard 11519-3, at a maximum transmission speed of 160kHz. The circuit consists of the following blocks:
- differential line transmitter
- differential line receiver with built-in filtering and digital interface
- sleep and wake up system
- watchdog and power on reset

Normal Operation Mode

The network consists of several nodes connected to a two-wire bus. The chip acts as the interface between the bus wires and the digital parts controlling communication. The bus sees all nodes as physically identical. The difference between nodes is in the controlling part which defines whether a node is a master or a slave.
For this interface chip the difference

between master and slave only becomes important during sleep and wake up mode. This will be described further on. The interface chip is directly connected to the bus wires on the two pins called Data and DataB.

These two pins are the outputs of the line transmitter, and are also the inputs of the line receiver. Eventually an impedance balance can be added externally at these two pins.

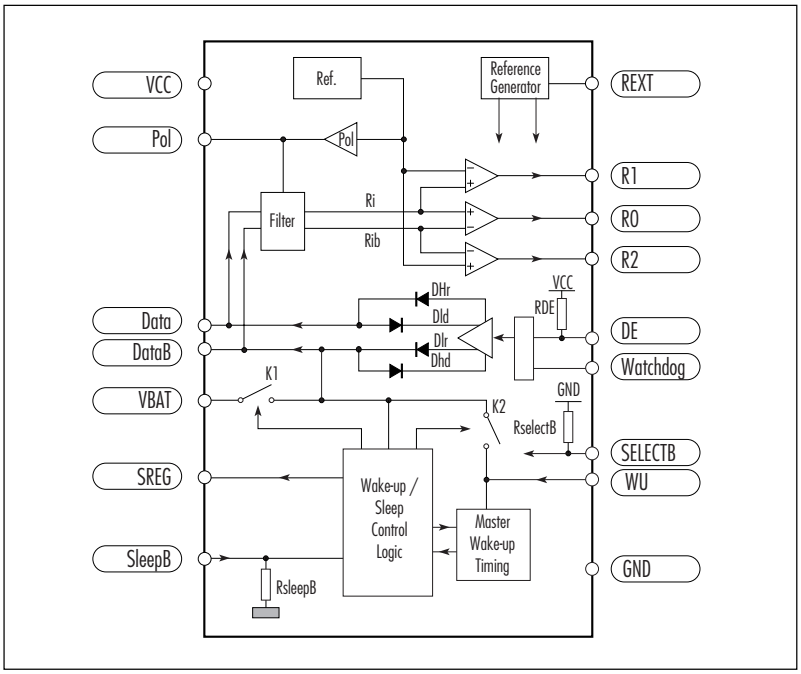

ALCATEL

Downloaded from DatasheetLib.com - datasheet search engine

MTC-30522

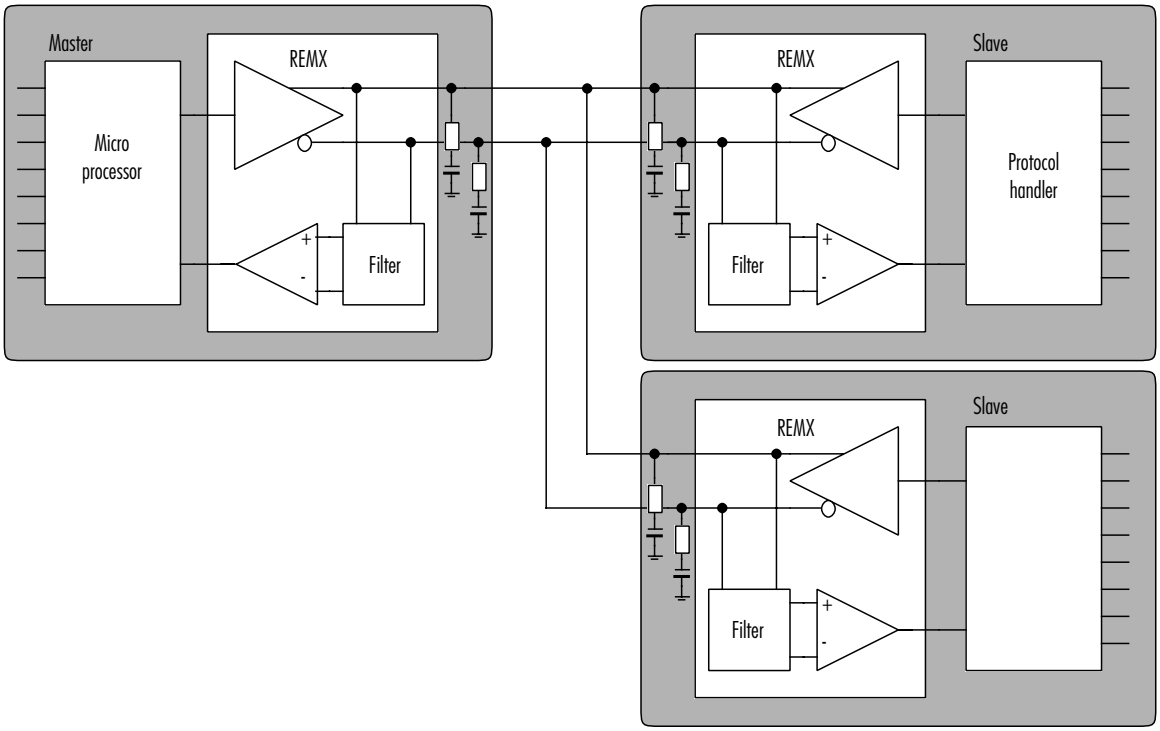

Fig.1: Basic Configurations of the Network

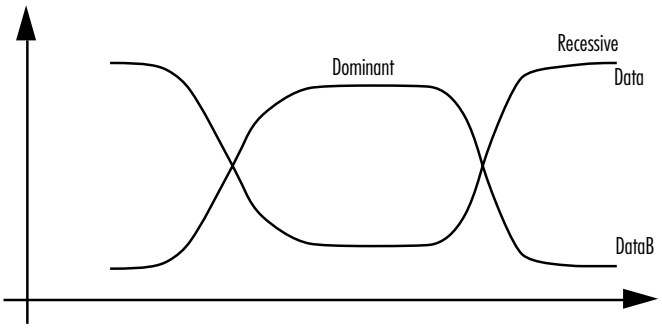

Fig.2: Typical Bus Signals

Downloaded from DatasheetLib.com - datasheet search engine

MTC-30522

Transmitter Functional Description

• Description:
The line transmitter consists of 4 current generators, two generating 50 mA providing the dominant state and two providing 1.2mA providing the recessive state. In normal mode, both recessive generators operate permanently. The two dominant generators only work when input DE is low, watchdog pin low and SELECTB input low. DE pin contains the information to be transmitted over the lines. The input SELECTB enable the chip to transmit the data and the Watchdog pin is used to perform the watchdog-function which will be explained later.

• Specificity of dominant generators:
For a recessive state command (DE = 1), both dominant current generators (50 mA) must remain disabled whatever the voltages (in the range -5V to +10V) present on the bus lines - i.e. Data and DataB.

• Current generators naming:
A generator sourcing current from VCC is designated DHx, whereas one sinking current to ground is designated DLx. Thus, the four current generators are called:
DHr, DLd for Data
DLr, DHd for DataB

• If the circuit is not powered, the generator outputs must be disabled so that Data and DataB offer high impedance to the bus in order not to disturb the whole network. A power-on-reset (POR) circuit is foreseen to define the POR-levels for Vcc and Vbat. Above the POR-level the circuit is powered and the normal functionality is foreseen. Below the POR-levels the outputs Data and DataB become high-impedant and the current-consumption is decreased.

• An external resistor (RRE = 10kΩ +/-1%) connected to pin REXT is used as a reference for the current generators at Data and DataB.

• Input DE indicates whether the dominant status is to be transmitted.

• When the chip is not selected (SELECTB = 1), dominant sources must be disabled whatever the DE state. While the chip is in sleep mode, all current sources are disabled and remain high impedant. This functionality is summarised in following table. The input signal SleepB puts the circuit in sleep mode when connected to ground.
This table also requires that the pin Watchdog is externally forced to ground.

• The SELECTB input not only disable the dominant current generators but also puts the receiver-outputs R0, R1, R2 in high impedance mode when SELECTB input is high.

SleepB	SELECTB	DE	DHr	DLd	DHd	DLr	R0	R1	R2
1	1	0	1.2mA	0mA	0mA	1.2mA	HI	HI	HI
1	1	1	1.2mA	0mA	0mA	1.2mA	HI	HI	HI
1	0	0	1.2mA	50mA	50mA	1.2mA	0	0	0
1	0	1	1.2mA	0mA	0mA	1.2mA	1	1	1
0	X	X	0mA	0mA	0mA	0mA	HI	HI	HI

HI = high impedant

Downloaded from DatasheetLib.com - datasheet search engine

MTC-30522

Thermal-shut-down: When the Data pin is shorted to VBAT, the dominant-current can cause an extreme dissipation (worst-case: 64mA*1.2*16V = 1.2W).
To prevent that the internal junction temperature is exceeded an internal thermal-shut-down TSD is implemented. This condition is memorised as long as R1 stays high (short still exist). The memory is reset once R1 becomes 0. The TSD can also be activated by the testmode. In this way the functionality of the TSD can be tested in production. The implementation of the testmode is depicted in figure 6. Testmode will be activated when 2 rising edges on pin Watchdog occur while DE stays one (2 bit shift-register).

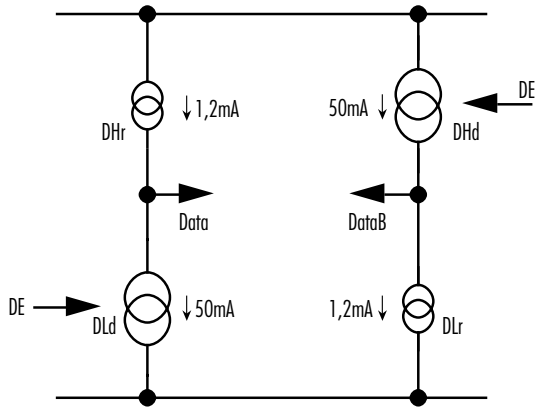

Fig.3: Transmitter Current Sources

Receiver

The line receiver is always active during normal operation, independent of the state of the transmitter. Basically the receiver part consists of an on-chip passive (first order) low pass filter, followed by three comparators in parallel. The outputs of these comparators pass to a small block of logic and are then transferred to the controller chip. The implemented filter is fully symmetrical, thus generating the internal signals Ri and Rib from the signals Data and DataB. Ri and RiB are fed to the inputs of the comparators. From these three comparators, one has its two inputs connected to Ri and RiB. The two other comparators have only one input connected to either Ri or RiB, while the other input is connected to an on chip reference voltage, indicated as Vpol. The value of this voltage is about half the output voltage of the transmitter. This ensures that, when the transmission is disturbed on one of the wires, the communication can still go on via the transmission on the other wire and one of the two supplementary comparators.

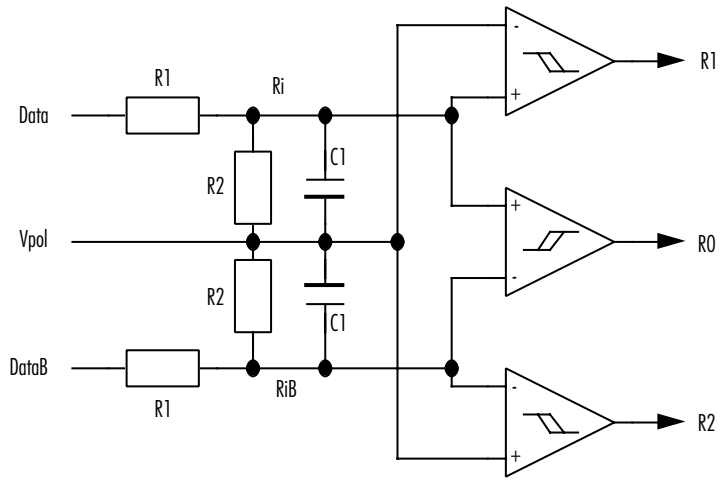

Fig.4: Receiver Section

Downloaded from DatasheetLib.com - datasheet search engine

MTC-30522

Watchdog Functional Description

If the pin DE of one transmitter remains for some reason in the dominant state the communication is lost on the hole network. And further the localisation of the faulty module by the diagnostic system is impossible. To prevent this a system WA is interfaced between the DE command and the transmitter that forces a recessive state after some delay defined by an external capacitor C (Fig.5)

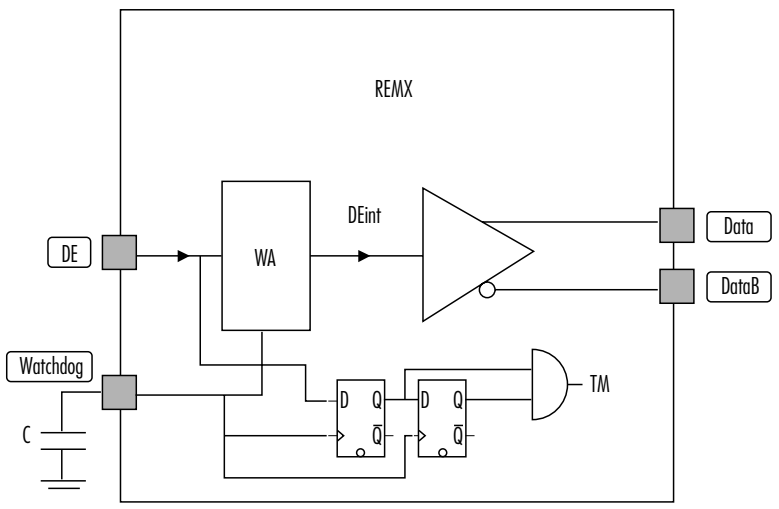

Fig.5

The function of the watchdog interface is displayed in the diagram below. The time-delay τdom is generated by charging the external capacitor starting when DE has become low (recessive to dominant transition). The capacitor is discharged after DE has become high again (dominant to recessive transition). This has to occur in less than one time-slot to enable the watchdog for a next falling edge on DE (τreset).

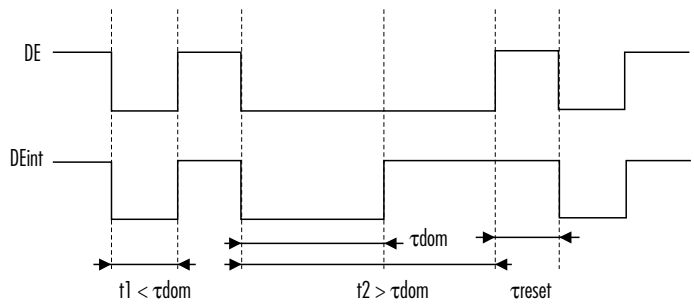

Fig.6

Downloaded from DatasheetLib.com - datasheet search engine

MTC-30522

Power-on-reset Function

The POR-circuit monitors the voltage-levels for the supplies VCC and Vbat. When Vcc becomes lower than PORLVcc then the device is put in power-down (POR-condition). It will stay in power-down until Vcc becomes higher than PORHVcc.
When Vbat becomes lower than PORVbat and Vcc stays high than the device is in sleep-mode. It will stay in sleep-mode until Vbat becomes higher than PORVbat.

The POR-condition is defined as follows:

- all internal circuits are switched in power-down(PD) to reduce the supply-currents
- the outputs R0,R1, R2 are put high-impedant
- the transmitter-outputs are put high-impedant
- the internal nodes Ri and RiB are shorted to Vcc (figure 14, paragraph "4.2.4. Filter Characteristics")
- the switches K1 and K2 are open (same as normal mode) (figure 8, paragraph "3.3 Sleep mode operation").

The implementation of this POR-function is important for the case of an open ground. In this case the voltage at the ground will increase referred to the external ground. The voltage between the gnd-pin and the Vcc pin will become lower than PORLVcc so that the outputs Data and DataB become high impedant. To avoid that the resistors of the filter will keep the GND-pin low the nodes Ri and RiB are connected to Vcc during POR.

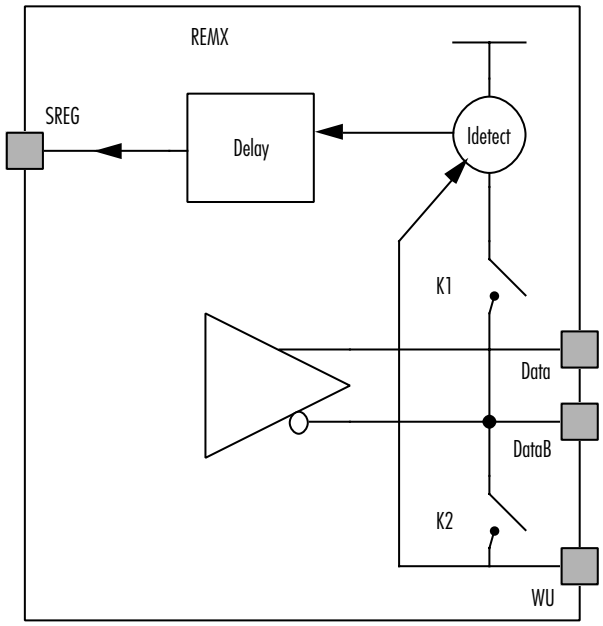

Fig.7: Sleep Circuit during Normal Mode and POR

Downloaded from DatasheetLib.com - datasheet search engine

MTC-30522

Sleep Mode Operation

An important function of the multiplexing system is its ability to go into a sleep mode. At this moment the power consumption is reduced to the minimum. The system can wake up again in two different ways. Although all interface chips are physically identical, the functionality of the chip is different for a master and a slave node. Figure 7 shows the most important circuits with regard to the sleep mode. On node DataB there are two switches, one to Vbat via a current sensor and one to the pin WU. Furthermore, the input SleepB is used to put the circuit in sleep mode, at which time the external regulator (SREG = tristate and pulled up by an external resistor) will be shut down. Following is a detailed description of the behavior of a master and a slave node. Figure 7 illustrates the state of all switches during normal operation; this is identical for a master and a slave node. Figure 8 shows a system during sleep mode. Figure 9 and 10 illustrate the possible sequences to go from sleep mode to normal mode and back. If the sleep/Wake-up function is not used (SleepB connected to Vbat), then it must be possible to connect Vbat to Vcc without disturbing the function of the transmitter and the receiver.

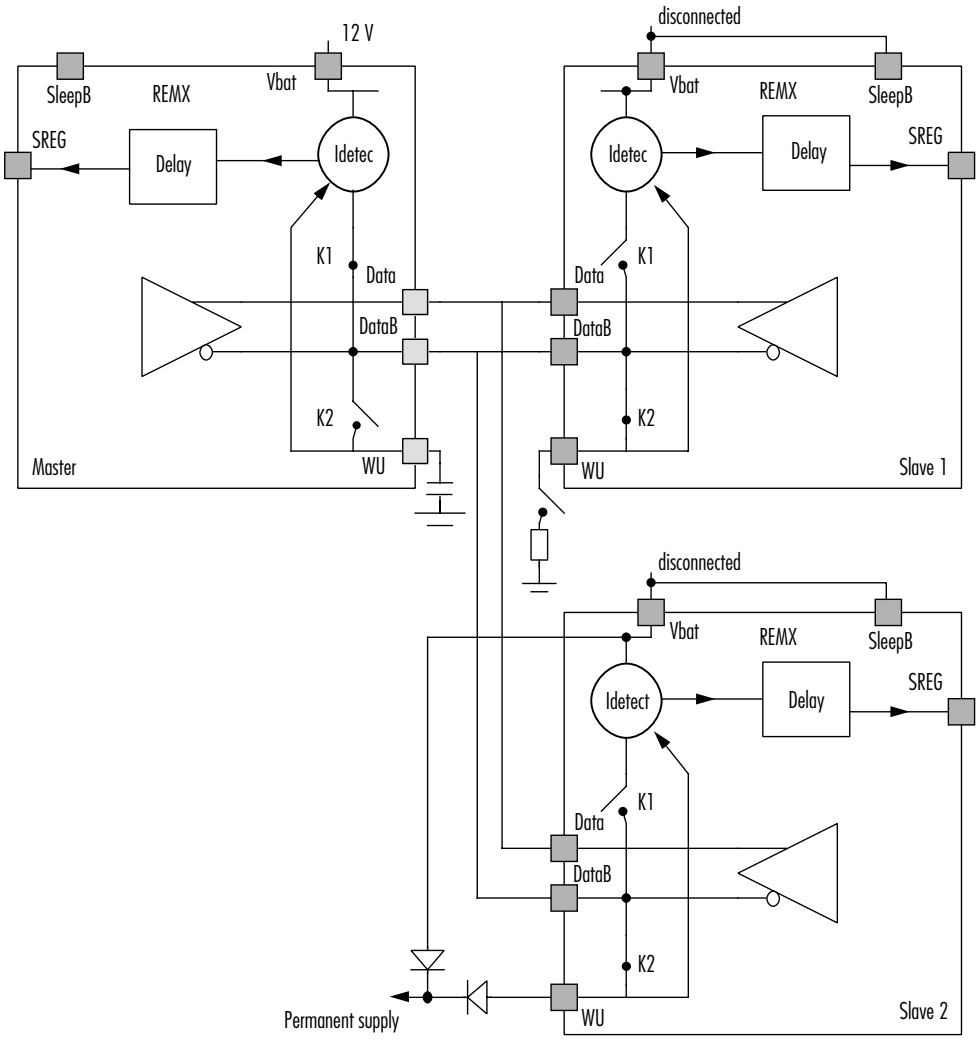

Fig.8: System Configuration in Sleep Mode

Downloaded from DatasheetLib.com - datasheet search engine

MTC-30522

Entering Sleep Mode

- Master node:

The interface chip in a master node is permanently connected to the supply Vbat. The system is put in sleep mode by pulling the pin SleepB of the master node to ground.
This disables the SREG-output which no longer pulls the DISABLE-input of the external regulator down. This condition will disable the external voltage regulator. The switch K1 which connects Vbat with the DataB wire in a master is closed. The transmitter is disabled and rendered highly impedant.

- Slave node:

When the external regulator of the master is disabled, the Vbat of all slaves is disconnected from the supply by an external circuit (e.g. by a relay which is controlled by the regulator). From this moment on the slaves are only supplied via the pin DataB. This is the difference between a master and a slave.
Because the Vbat of the slaves is disconnected, the switch K2 closes, connecting DataB with the pin WU. The system is now in sleep mode.

Wake Up Through Current Detection

When, at a particular slave node, the pin WU is connected to ground (eventually via a resistor) a current will flow from Vbat at the master node, through the DataB wire, to ground. When this current is above a well defined value Idet, this will be detected in the master node. When this current is flowing for a period tds the pin SREG is pulled down and the external regulator is activated. The period tds is defined by the interface chip and an external capacitor connected to pin WU at the master node. When the regulator is active again, the microcontroller in the master node will pull high the pin SleepB. This will open the switch K1. The master is now in normal operation again. Since the regulator in the master-module is activated again, the pin Vbat in the slaves is reconnected to the supply. In all slaves the pin SleepB is connected to Vbat. Therefor, from the moment the Vbat is connected, the slave is in normal operation again. Switch K2 is therefor opened. Following is a table explaining the different states for both a master and a slave.

Master Node	**Normal Mode**	**Sleep Mode**
K1	open	closed
K2	open	open
WU	loaded with capacitor and discharged to ground	loaded with capacitor and discharged until I(DATAB)<Idet
SleepB	1	0
1Vbat	connected	connected
Slave Node	**Normal Mode**	**Sleep Mode**
K1	open	open
K2	open	closed
WU	contact to ground	contact to ground
SleepB	1	0
1Vbat	connected	disconnected

Downloaded from DatasheetLib.com - datasheet search engine

MTC-30522

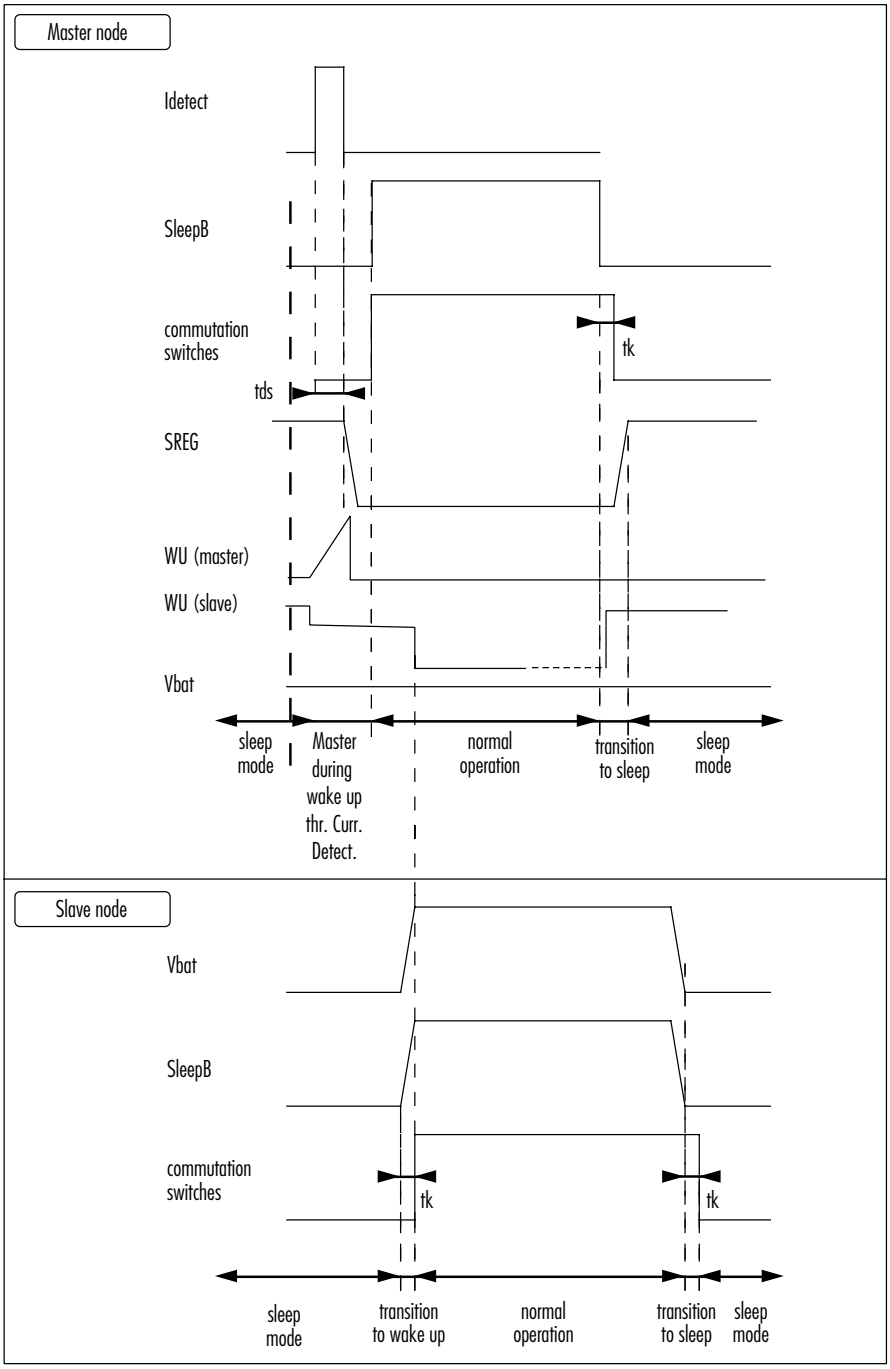

Fig.9: Wake-up through Current Detection

Downloaded from DatasheetLib.com - datasheet search engine

MTC-30522

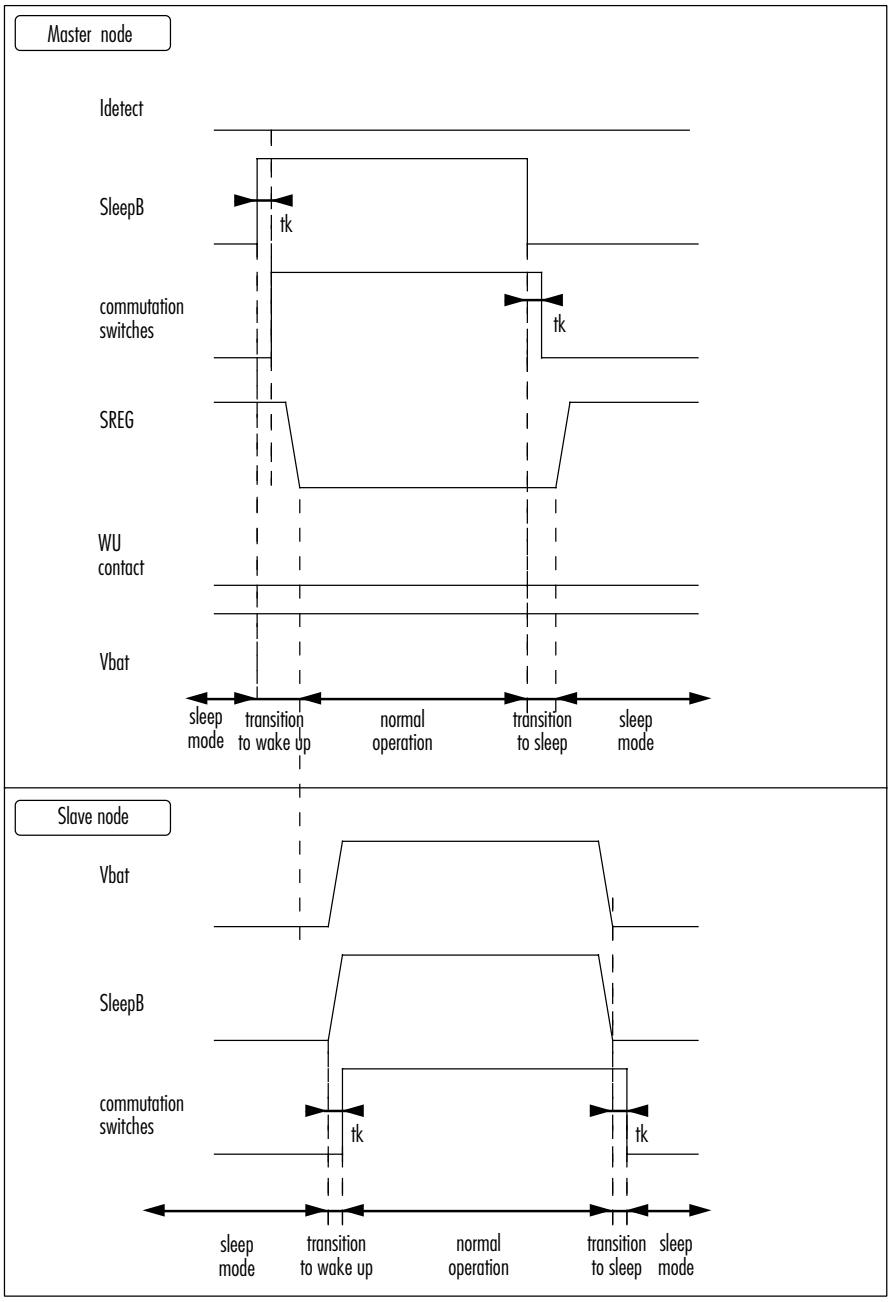

Fig.10: Wake-up through SleepB Activation

Downloaded from DatasheetLib.com - datasheet search engine

MTC-30522

Wake Up Through SleepB Activation

The system can also be activated by pulling high the pin SleepB of the master. At that moment the external regulator will be enabled and the master is in normal operation again. Powering up the regulator will also connect the Vbat of the slaves again, putting the slaves back in normal mode.

Permanent Supply at a Slave Node

Circuits located at a slave node and which need a permanent supply, even during sleep mode, can be connected as shown in figure 8. During normal mode the circuit is supplied through Vbat. During sleep-mode the circuit is supplied through DataB of the master. In this latest case, the current consumption of this circuit has to be low enough to avoid that the master will detect this as a current to restart the system.

Overvoltages on Pins Data, DataB and Vbat

The pins Data, DataB must be capable of being connected to:
- 18V during 2 hours
- 24V during 1 minute
- -12V during 5 seconds

without destroying the component, and this over the complete temperature range as long as the maximum junction temperature of REMX is not exceeded, with the circuit supplied or not, and whatever the status of the current generators.
(To calculate the junction temperature Tj of REMX: Tj = Dissipation(W) * Thermal-resistance of the package (Rth = 78dgc/W))

Parametrical characteristics will not be guaranteed under these conditions.

The pin Vbat must be capable of being connected to:
- 18V during 2 hours
- 24V during 1 minute
- -0.7V during 5 seconds

without destroying the component, and this over the complete temperature range as long as the maximum junction temperature of REMX is not exceeded, with the circuit supplied or not, and whatever the status of the current generators.

Parametrical characteristics will not be guaranteed under these conditions.

The outputs of the line transmitter have to be independent. When one is short circuited to ground, to the supply voltage, or is open, this should not influence the performance of the other output.

The pins Data and DataB must withstand the pulses 1 to 5 in according to ISO 7637 part 1. The exact values are listed in the table below.

Parameter	Pulse 1	Pulse 2	Pulse 3a	Pulse 3b	Pulse 5 (fig 11)
Class	C	C	C	C	C
Vamp(V) (*)	-85	+73.5	-150	+100	50
Ri(Ω)	10	10	50	50	2
T	2 ms	50 µs	0.1 µs	0.1 µs	400 ms
Tr	≤ 1 µs	≤ 1 µs	≤ 5 ns	≤ 5 ns	5 to 10 ms
number	1	1	1	1	1

(*): Voltage Vamp of all pulses is referred to 0V.

Downloaded from DatasheetLib.com - datasheet search engine

MTC-30522

The pin VBAT must withstand the pulses 1 to 5 in according to ISO 7637 part 1 with the external components depicted in figure 26: REMX Applications Diagram on page 29.

Parameter	Pulse 1	Pulse 2	Pulse 3a	Pulse 3b	Pulse 5 (fig 11)
Class	C	C	C	C	C
Vs(V) (*)	-100	+100	-150	+100	36.5
Ri(Ω)	10	10	50	50	2
T	2 ms	50 µs	0.1 µs	0.1 µs	400 ms
Tr	≤ 1 µs	≤ 1 µs	≤ 5 ns	≤ 5 ns	5 to 10 ms
number	34000	17000	36000	36000	5

(*): Voltage Vs is referred to 0V for pulse 1. Voltage Vs is referred to 13.5V for pulses 2, 3a, 3b and 5.

Pulse 5: Pulse defined for an alternator with internal protection.

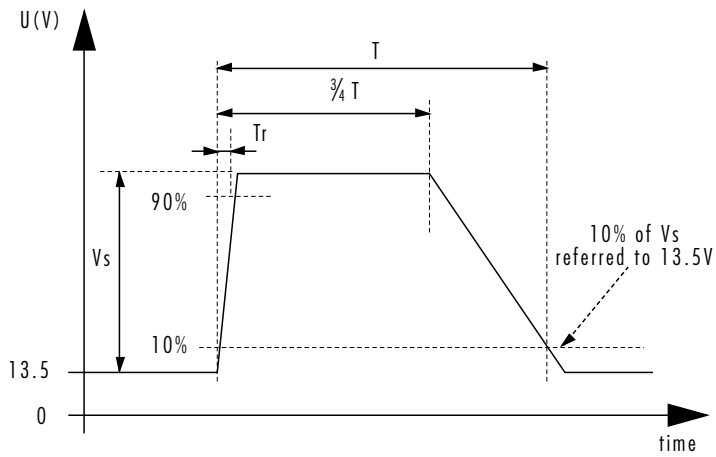

Fig.11: Pulse 5

Downloaded from DatasheetLib.com - datasheet search engine

MTC-30522

Pinout and Packaging

Pinout

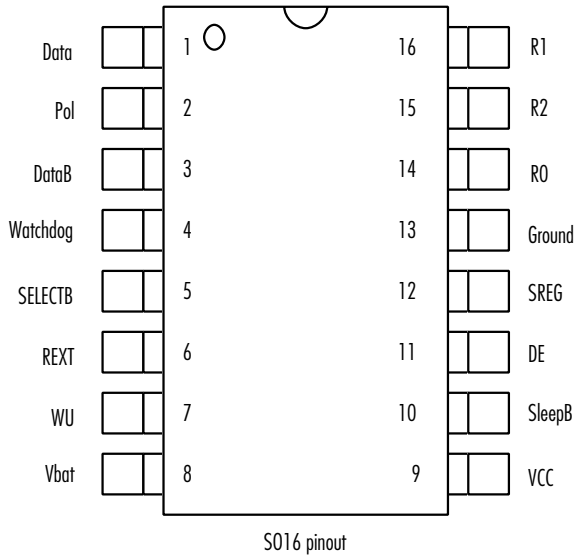

Fig.12: Pin Configuration

Pin Description

Nr.	Name	Type	Description
1	Data	interface	positive interface pin
2	Pol	analog out	reference voltage for input filter
3	DataB	interface	negative interface pin
4	Watchdog	analog I/O	current output for watchdog function
5	SELECTB	digital in	Enable input for transmitter and data outputs R0, R1, R2
6	REXT	analog in	current reference input
7	WU	analog I/O	wake up pin
8	Vbat	supply	battery supply voltage
9	Vcc	supply	5V supply
10	SleepB	digital in	sleep input
11	DE	digital in	transmit data in
12	SREG	digital out	output to disable the external voltage regulator
13	GND	supply	ground pin
14	R0	digital out	receive data out
15	R2	digital out	receive error2 out
16	R1	digital out	receive error1 out

Downloaded from DatasheetLib.com - datasheet search engine

MTC-30522

Packaging

Package Name	Package Code	Alcatel Microelectronics Drawing n°	JEDEC Outline DWG
16 pins PSOP 300 mils	SO16 B	87-0034	MS-013

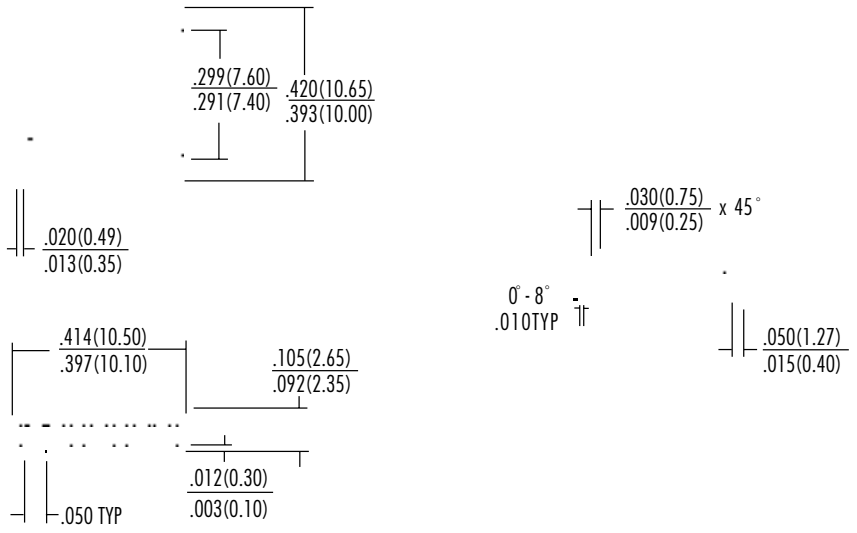

Fig.13: Package

Marking

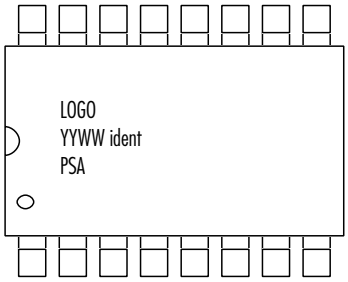

Fig.14: Topside Marking

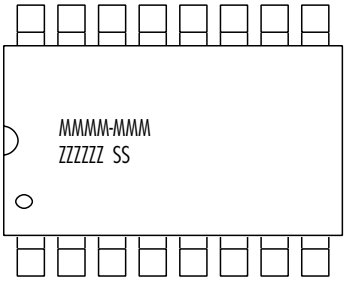

Fig.15: Backside Marking

LOGO: Micro-signature Alcatel.
YYWW: assembly year and week.
ident: REMX
SS: Assembly source code.
MMMM-MMM: Alcatel Microelectronics product name.
ZZZZZZZ: wafer lot identification.

Downloaded from DatasheetLib.com - datasheet search engine

MTC-30522

Delivery

- **Delivered in tubes**

44 devices per tube

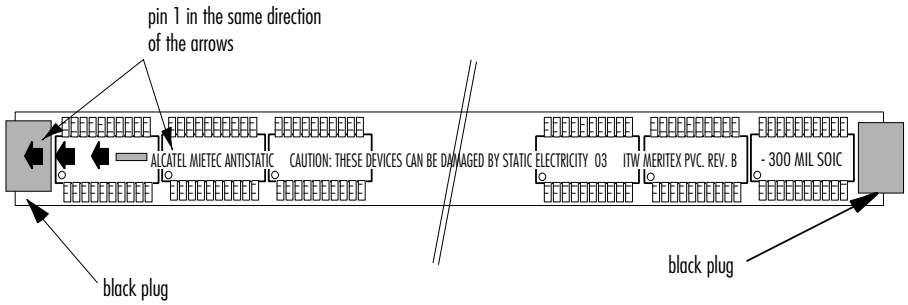

Fig.16: SOIC Tube

- **Delivered Tape on Reel**

The plastic small outline (SO), can be placed in tape on reel, eventually in combination with dry pack.

All used materials and procedures are in line with the related EIA, IEC documents.

IEC 286-3 - packing of components for automatic handling

EIA-481-2 - 16 and 24 mm embossed carrier taping of surface mount components for automatic handling

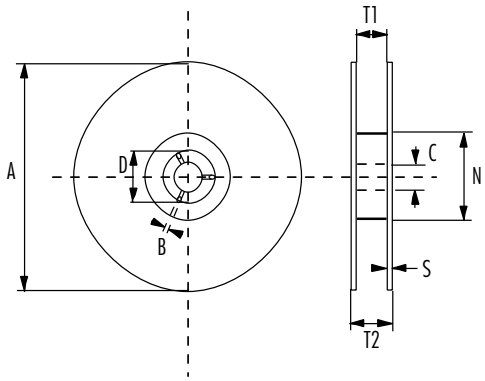

Fig.17

Reels (Fig.17)								
Tape width	A	N	T1	T2	D	B	C	S
+0.5 -0.5 16	+0.5 -0.5 330	+0.4 -1.6 62	+0.4 -0.6 18	+0.2 -0.2 22	+0.0 -0.5 30.0	+0.2 -0.2 2	typ 13	 2.0

(All figures in mm)

Downloaded from DatasheetLib.com - datasheet search engine

MTC-30522

- **Carrier Tapes**

Carrier tapes with width of 12, 16, 24, 32 or 44mm are used.

Material: Conductive polystyrene - black
Thickness: 200 - 400um
Tensile strenght: 19 - 25 Mpa
Elongation at break: 40 - 45%
Surface resistance: 10E4 - 10E6 Ω/SQ
Vicat softening point: 90 - 98°C

Dimensions for 12, 16 or 24mm tape (All dimensions in mm) (Fig.18).

W:	12 +/- 0.3 or 16 +/- 0.3 or 24 +/- 0.3
D1min:	1.5
E1:	1.75 +/-0.10
P0:	4.0 +/-0.10
S1min:	0.6

- **Cover Tape**

Cover tapes with width of 9.3, 13.5, 21.5, 25.5, 37.5mm are used in relation to the tape width.
Material:
static dissipative polyester temperature sensitive tape
First layer: Transparent polyester
Second layer: Polyethylene
Total thickness: 0.060 mm
Tensile strength: 110 N/cm
Surface resistivity: 1.2x10E12 Ω/SQ
Elongation at break: 91%

The clearance between the ends of the terminals or body of the component to the sides and depth of the cavity (A0, B0, C0) must be within 0.05mm min and 0.50mm max for 12mm tape, or within 0.15mm min and 0.9mm max for 16mm tape, or within 0.15mm min and 1.0mm max for 24, 32 or 44mm tape.

The cavities of the 44, 68 and 84 pins PLCC (PC) and PQFP (PQ) devices will have a platform supporting the body of the package making sure the lead tip is not touching the cavity.

- **General**

All components are located in the cavity with pin 1 adjacent to the round sprocket holes.
The components are packed with the terminations facing the bottom of the embossed carrier.
There is a leader (start) of 230mm minimum which may consist of carrier and/or cover tape followed by a minimum of 160mm of empty carrier tape sealed with cover tape.
There is a tailer (End) of 160mm minimum of empty carrier tape sealed with cover tape. The entire carrier tape must release from the reel hub as the last portion of the tape unwinds from the reel without damage to the carrier tape and the remaining components in the cavities.

More details can be found in the Alcatel Microelectronics document spec 16665 and spec 9210.

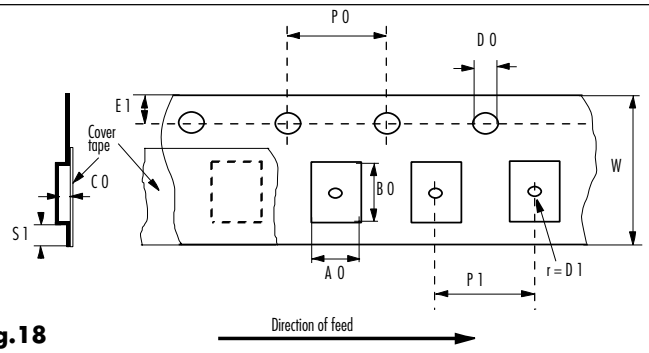

Fig.18

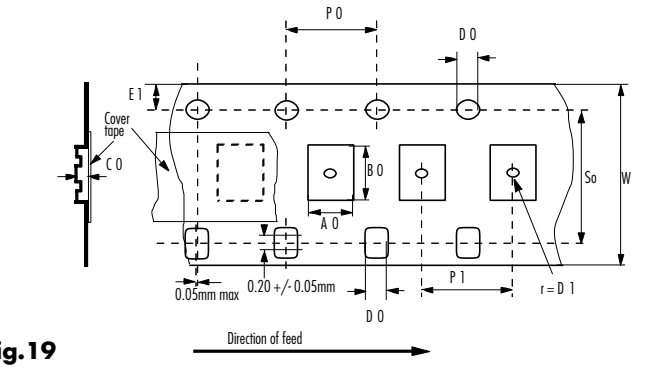

Fig.19

Tooling list for carrier tape:

Package Type	**Tape width** (W)	**Pitch mm** (P1)	**A0 mm**	**B0 mm**	**C0 mm**	**Standard Qty/reel**	**Meters /reel**	**Cavity /reel**
SO16 B	16 mm	12	10.7	10.7	3.1	1000	13.0	1083

Downloaded from DatasheetLib.com - datasheet search engine

MTC-30522

Soldering Information

All components meet the minimum requirments of the two requirements outlined below.

- Solder wettability: test Mil STD 883 D method 2003 (95 % solder wetting of the leads)

- Wetting balance solderability test: Mil SRTD 883 D method 2022 (5 sec 245°C)

- **Through Hole Devices**

These devices can be soldered with most industry standard soldering processes.
The devices withstand the resitance to soldering test IEC 68 - 2 - 20 (2 cycles).

- **Surface Mount Devices**

Take into account the dry pack recommendatinos as stated on the label applied.
All SMD components can be soldered with the standard infra red, vapour phase and double wave soldering processes.
Recommended profiles can be found in fig. 20, 21 and 22.

IR surface mountable components meet the following test sequence

storage 85°C, 85 % RH, 168 hrs followed by 2 cycles of infra red solder heat application (CECC00802) and 100 thermal cycles -55°C / +125°C (Mil STD 883 D method 1010).

Double wave mountable components meet the following test sequence

storage 85°C, 85 % RH, 168 hrs followed by 1 cycles of double wave solder heat application (CECC00802) and 100 thermal cycles -55°C / +125°C (Mil STD 883 D method 1010).

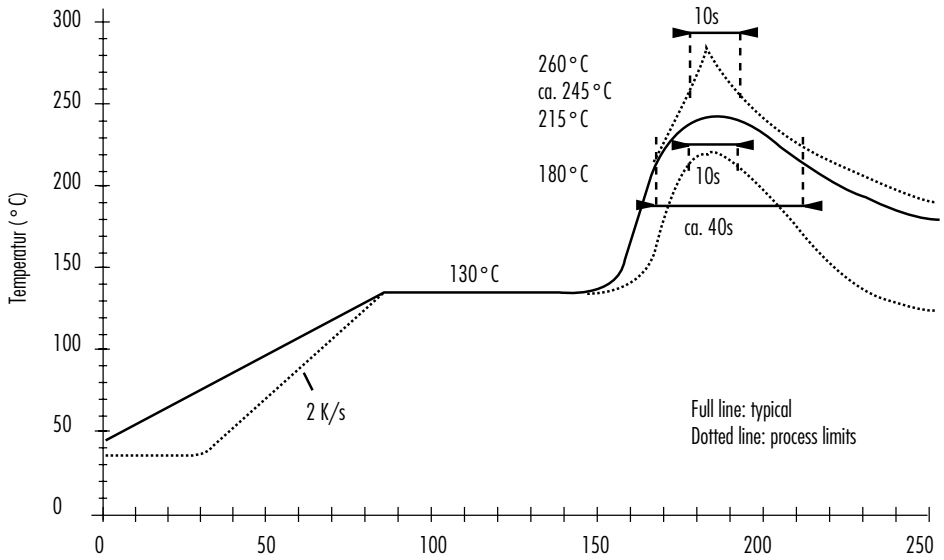

Fig.20: Infra Red Soldering

Downloaded from DatasheetLib.com - datasheet search engine

MTC-30522

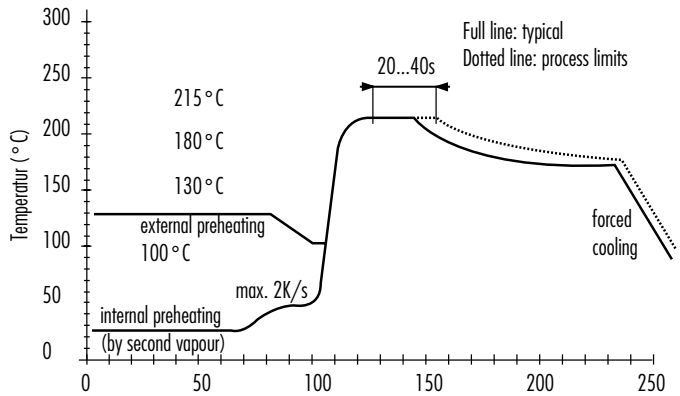

Vapour Phase; Batch System with Preheating

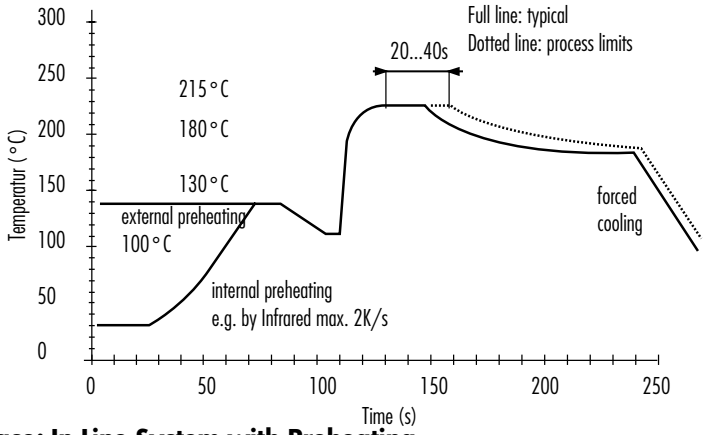

Fig.21: Vapour Phase; In Line System with Preheating

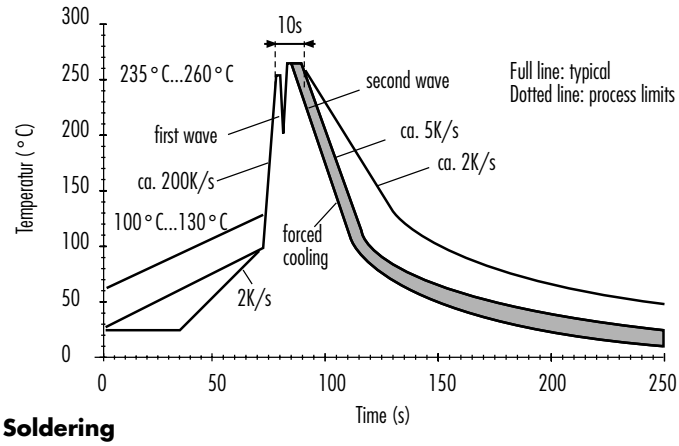

Fig.22: Double Wave Soldering

Downloaded from DatasheetLib.com - datasheet search engine

Electrical Characteristics

Absolute Maximum Ratings

Sym	Description	Min	Max	Unit
Vbatmr	power supply voltage	GND - 0.3	50(Note 1)	V
Vccmr	power supply voltage	GND - 0.3	7	V
VDatamr, VDataBmr	Voltage at Data DataB	-85(Note 1)	+50(Note 1)	V
SleepBmr	Voltage at input SleepB	-0.3	Vbat + 0.3	V
WUmr	Voltage at input WU	-2.0	20.0	V
Vinputsmr	Voltage at inputs DE, SELECTB, Watchdog	-0.3	Vcc + 0.3	V
Tmr	ambient temperature under bias	-45	130	°C

Note 1: The maximum time for Vbat at 50V is related to pulse 5, the maximum time for Data and DataB at 50V and -85V is related to pulse 5 and 1. The related pulses are discribed on pages 11 and 12.

Operating Ranges

Sym	Description	Min	Max	Unit
Vbat_m	power supply voltage for master (note 1)	6.1	16	V
Vbat_sl	power supply voltage for slave during normal-mode	4.75	16	V
Vcc	power supply voltage	4.75	5.25	V
Tamb	ambient temperature	-40	125	°C
Vdata, VdataB	Voltage at Data, DataB	-5	10	V
SleepB	Voltage at input SleepB	0	Vbat	V
WU	Voltage at input WU	0	Vbat	V
Vinputs	Voltage at inputs DE, SELECTB, Watchdog	0	Vcc	V
Cla	load capacitance on ASIC outputs		70	pF

Note 1: All parameters are guaranteed for the voltage range Vbat_sl except parameters Vrev1, Vrev2, Vrev, Idetect, ICR1, ICR2 and tds (all parameters of the sleep/wake-up circuit) which are only guaranteed for the voltage-range Vbat_m.

Downloaded from DatasheetLib.com - datasheet search engine

MTC-30522

Detailed Electrical Characteristics

All characteristics are valid under the full operating range of temperature and supply voltage, mentioned above, unless otherwise noted.

The pin REXT has to be connected to ground via an external resistor of 10 KΩ (tol. < 1%).

Watchdog Function

The chip is put in Normal mode (V(SleepB) = Vbat).

The internal current-source (IWD) charges the external capacitor when input DE is low. This current is referred to the reference current Iref at input REXT which is determined by an external resistor Rref. This current is depending of an internal reference voltage (VBG). Also the threshold level is depending of the same reference so that the watchdog delay time is independent of the absolute value of this reference.
The capacitor is discharged through an internal switch when input DE is high.
The external capacitor at the watchdog pin is 6.8nF for 62.5Kbits/s and 3.3nF for 125Kbits/s.
Typical values for the parameters below are Iref = 200uA, Iwd = 16µA, Vwd = 2.42V. These parameters result in the following typical delay times:

- Cwd = 6.8nF =>
  Twatchdog = 1030µs Treset < 4µs
  (Twatchdog = Cwd*Vwd/Iwd)
- Cwd = 3.3nF =>
  Twatchdog = 500µs Treset < 2µs
  (Treset < Cwd * Zwd*5).

Specification:

Sym	Description	Min	Max	Unit
Vrext	Voltage at pin Rext	1.9	2.1	V
Iwd	pull-up current at pin watchdog DE = 0	-15%	+15%	Vrext/10KΩ/12.5
Vwd	threshold level for watchdog input DE = 0	-10%	+10%	Vrext *3/2.5
Zwd	output impedance at watchdog input DE = 1		100	Ω

Note 1:
output impedance measured for V(watchdog) = 0.5V.
Zwd = V(watchdog)/I(watchdog)

Downloaded from DatasheetLib.com - datasheet search engine

MTC-30522

Power-on-reset Function

The POR-circuit monitors the voltage-levels for the supplies VCC and Vbat. When Vcc becomes lower than PORLVcc then the device is put in power-down (POR-condition). It will stay in power-down until Vcc becomes higher than PORHVcc.
When Vbat becomes lower than PORVbat and Vcc stays high than the device is in sleep-mode. It will stay in sleep-mode until Vbat becomes higher than PORVbat.

The POR-condition is defined as follows:
- all internal circuits are switched in power-down(PD) to reduce the supply-currents.
- the outputs R0,R1, R2 are put high-impedant
- the transmitter-outputs are put high-impedant
- the internal nodes Ri and RiB are shorted to Vcc
- the switches K1 and K2 are open (same as normal mode)

Specification:

Sym	Description	Min	Max	Unit
PORLVcc	Low level of the POR-circuit for Vcc	2.2	3	V
PORHVcc	High level of the POR-circuit for Vcc	2.8	3.6	V
PORDVcc	Difference between high and low level PORDVcc = PORHVcc - PORLVcc	0.35	0.75	V
PORVbat	Low- and High level of the POR-circuit for Vbat	2.5	3.5	V

Sleep/Wake-up System

Symbol	Parameter	Min	Typ	Max	Unit	Conditions
Vrev1	Voltage drop from Vbat to DataB (master node)	0		1	V	Irev1 = 5mA
Vrev2	Voltage drop from DataB to WU (slave node)	0		2.1	V	VDataB = V(Vbat) - Vrev1 Irev2 = 5 mA
Vrev	= Vrev1 + Vrev2	0		3	V	
Idetect	Wake up detection current at DATAB (master node)	10		15	mA	
ICR1	Short circuit current (master)	15		50	mA	
ICR2	Short circuit current (slave)	15		100	mA	
tds	Delay time for Idetect	1		10	ms	C at pin WU = 10 nF
Ifv	Current consumption of a slave node in sleep mode (current from DataB to Gnd)	-50		50	µA	

Downloaded from DatasheetLib.com - datasheet search engine

MTC-30522

Transmitter

Symbol	Parameter	Min	Typ	Max	Unit	Conditions
Vod	differential output voltage	5.6			V	square wave at DE: - Freq = 20 KHz - duty cycle = 50% note 1
Vmce	common mode voltage (DC condition)			6.6	V	Vbat = 12V
Dvmcei	variation of the common mode voltage within 2us after DE transition	-3		3	V	Fig.25 square wave at DE: - Freq = 20KHz - duty cycle = 50%
Dvmcef	variation of the common mode voltage 2us after DE transition	-1		1	V	Fig.25 square wave at DE: - Freq = 20KHz - duty cycle = 50%
IldD	current limitation in dominant mode at pin Data	40	50	64	mA	VData = Vcc -2.2V
IldDB	current limitation in dominant mode at pin DataB (absolute val.)	40	50	64	mA	VDataB = GND +2.2V
Ilr	current limitation in recessive mode (absolute value for Data)	1	1.2	1.45	mA	VDATA = GND +2.2V VDATAB = Vcc -2.2V
Mim	matching of dominant currents	0		+30	%	note 2
Mir	matching of recessive currents	0		+30	%	note 3
IRG1	Recessive current template level 1	Ilr -20%		Ilr +20%	mA	Fig.24a Fig.24b
IRG2	Recessive current template level 2	-0.5		0.2	mA	Fig.24a Fig.24b
IDG1_D	Dominant current template level 1 for Data	ILdD -35%		ILdD +20%	mA	Fig.24b
IDG1_DB	Dominant current template level 1 for DataB	ILdDB -40%		ILdDB +20%	mA	Fig.24a
IDG2	Dominant current template level 2	-8		2	mA	Fig.24a Fig.24b
Ilm	leakage current for master node at (Data + DataB)			60	µA	note 4
Ils	leakage current for slave node at (Data + DataB)			40	µA	note 4
IFD12	leakage current at pin Data	-50		50	µA	0V < VData < 15V 0 < Vbat < 0.5V

Downloaded from DatasheetLib.com - datasheet search engine

MTC-30522

Symbol	Parameter	Min	Typ	Max	Unit	Conditions
IFD3	leakage current at pin Data	-750		50	µA	-15V < VData < 0 Vbat = Vcc = 0
IFDB12	leakage current at pin DataB	-50		50	µA	0V < VDataB < 15V 0 < Vbat < 0.5V Vcc = 0V or 5V
IFDB3	leakage current at pin DataB	-750		50	µA	-15V < VDataB < 0 Vbat = V56 = 0
Dtpdr1	Absolute value of difference between propagation delay times tpdrlh1(data) and tpdrhl9(datab) for D>R transition	0		250	ns	Fig.23
Dtpdr9	Absolute value of difference between propagation delay times tpdrlh9(data) and tpdrhl1(datab) for D>R transition	0		700	ns	Fig.23
Dtprd1	Absolute value of difference between propagation delay times tprdlh1(datab) and tprdhl9(data) for R>D transition	0		200	ns	Fig.23
Dtprd9	Absolute value of difference between propagation delay times tprdlh9(datab) and tprdhl1(data) for R>D transition	0		500	ns	Fig.23
tpdrlh1 tpdrhl9	Propagation delay D->R	30		500	ns	note 5, Fig.23
tpdrlh5 tpdrhl5	Propagation delay D->R	200		1000	ns	note 5, Fig.23
tpdrlh9 tpdrhl1	Propagation delay D->R	500		1700	ns	note 5, Fig.23
tprdlh1 tprdhl9	Propagation delay R->D	100		600	ns	note 5, Fig.23
tprdlh5 tprdhl5	Propagation delay R->D	400		900	ns	note 5, Fig.23
tprdlh9 tprdhl1	Propagation delay R->D	600		1400	ns	note 5, Fig.23

Downloaded from DatasheetLib.com - datasheet search engine

MTC-30522

Note 1:
Vod = Abs (VData - VDataB)DE = 0
+Abs (VData - VDataB)DE = 1
This is a peak to peak measurement.

Note 2:
Mim = |(2 * (IData - IDataB))| / (|IData |+ |IDataB|)

Note 3:
Mir = |(2 * (IDataB - IData))| / (|IData| +| IDataB|)

Note 4:
The pins Data and DataB are resistively connected to each other via the integrated receiver filter.
Defining a leakage current at these nodes therefore only makes sense when the voltages at these two nodes are forced at the same voltage, so that no current is flowing through the filter.
As a consequence of this the definition of leakage currents on pins Data and DataB only makes sense when the line transmitter is disabled, i.e. in sleep mode.
When the device is in sleep mode, the pin DataB is connected via a switch either to Vbat or to the pin WU.
Therefore the leakage currents are defined as follows:

- the pins Data and DataB are connected to each other and the sum of the leakage current is measured.
- for Ilm : Vbat = 12 V
  V (Data + DataB) = 12V
- for Ils : Vbat = 0 V
  V(Data + DataB) = Vwu = 12V

Note 5:
During these measurements the load at Data and DataB is :
R->D : 4.3nF to GND + 20mA to simulate the total recessive load at a node
D->R : 270 pF to GND

Note 6:
Dtprd production test limit =100ns
design limit = 50ns

Note 7:
These limits are design limits, but will not be tested in production.

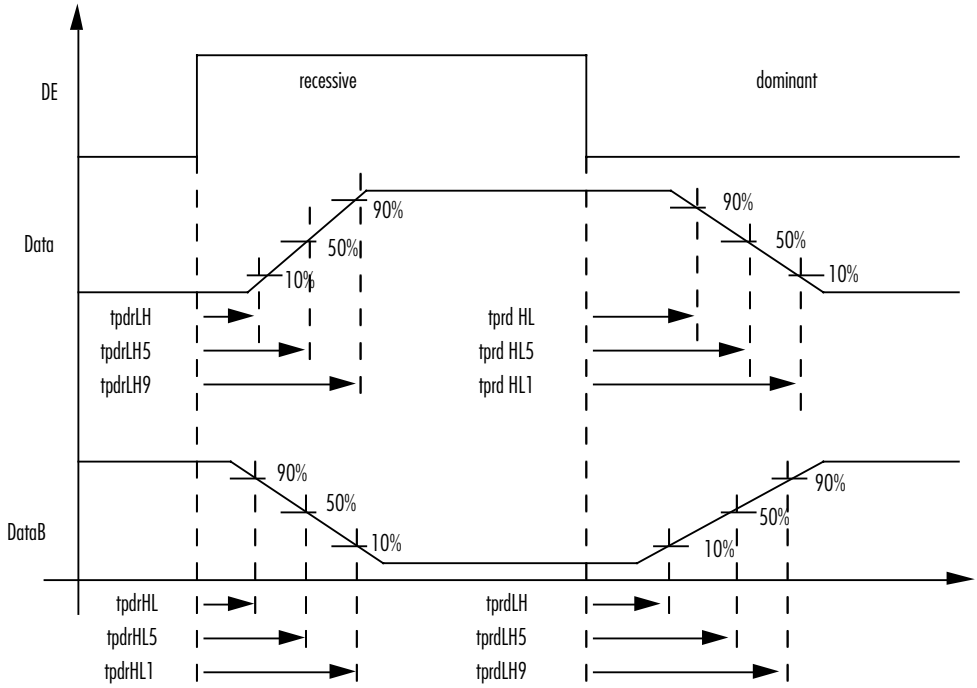

Fig.23: Level Dependent Delays

Downloaded from DatasheetLib.com - datasheet search engine

MTC-30522

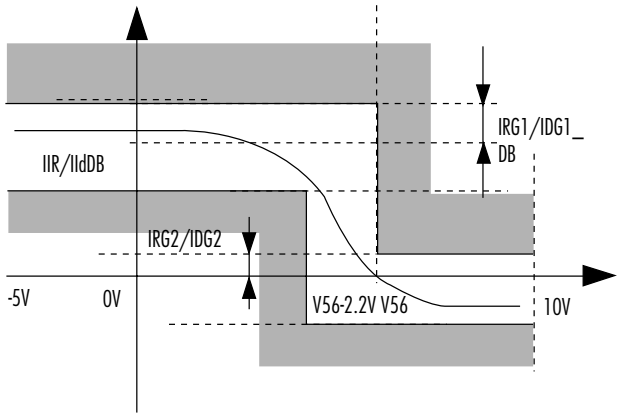

Fig.24a: Current Gabaryt

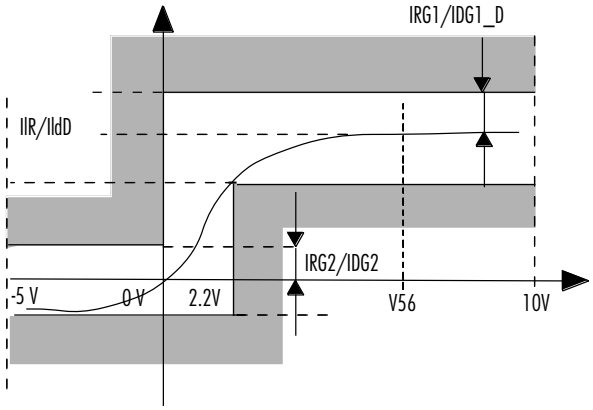

Fig.24b: Current Gabaryt

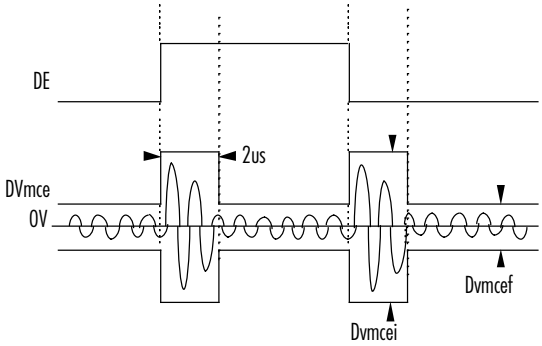

Fig.25: Transmitter Propagation Delays

Downloaded from DatasheetLib.com - datasheet search engine

Receiver

Symbol	Parameter	Min	Typ	Max	Unit	Conditions
Vmcr	Common mode voltage range	-2.8		5	V	
Fr1 §	Resistor value R1 in filter	21	42	72	KΩ	Fig.4 note 1
Fr2 §	Resistor value R2 in filter	14	28	48	KΩ	Fig.4 note 1
Fr12 §	Ratio Fr2/Fr1 = 42/28					Fig.4 note 1
Dfr21 §	Tolerance on FR12	-1		+1	%	Fig.4 note 1
Fc1 §	Capacitor value C1 in filter	8.5	10	11.5	pF	Fig.4 note 1
VCP	Positive comparator threshold level	200		420	mV	note 2
VCN	Negative comparator threshold level	- 420		- 200	mV	note 2
Voff	Input offset voltage (0V to Vcc common mode)	-50		+50	mV	note 2
VoffR0cmr	input offset voltage for the full common mode range	-65		+55	mV	note 1
Vhyst	input hysteresis	480		750	mV	note 2
TprLH, TprHL	Propagation delay time from input input (Data, DataB, Vpol) to output (R0 or R1 or R2)			600	ns	Vin peak-peak = 1V note 3
Dtpr	Difference between propagation delay times			100	ns	Vin peak-peak = 1V
Zgt1 §	Output impedance of pin Vpol			200	Ω	at 1MHz
Zgt2	Output impedance of pin Vpol			200	Ω	at 250KHz
Igtv	Leakage current at pin Vpol in Sleep mode	-15		15	uA	V(POL) = 15V V(Vcc) = 5V, V(vbat) = V(sleepb) = 0V
Vgt	output voltage of pin Vpol	-5%	2.5	+5%	V	load current +/-1mA
ZgtDC	output impedance of pin Vpol at low frequencies			30	Ω	load current +/-4mA note 3

Note 1:
Matching of resistors and capacitors of the filters on the two inputs is better than 1%. The different elements of the input filter cannot be measured externally. During production test the following parameters will be measured: the total resistance (Fr1+Fr2) between pin Vpol and Datax. These measurements, combined with the measurements on hysteresis, offset and propagation delays will guarantee the correct operation of the receiver section.

Note 2:
The values for positive and negative threshold level, offset and hysteresis of the line receiver are specified at the pins Data and DataB. This is a combination of the actual hysteresis and offset of the comparator, and the ratio of the resistors in the input filter.
Vhyst is defined as (VCP- VCN)
Voff is defined as (VCP+VCN)/2.

Note 3:
To measure the comparator with output R0, Data will be driven with a voltage Vpp1 = 1 V, DataB will be driven with Vpp2 = 1 V Vpp1 and Vpp2 are complementary.
To measure the two other comparators, Datax will be driven with a voltage Vpp = 2 V, and centered around the level Vpol.

Downloaded from DatasheetLib.com - datasheet search engine

Current consumption

Symbol	Condition	Value			
		Min	Typ	Max	Unit
Ivbat_Sle	Current consumption at Vbat in Sleep mode (note 1a)			330	µA
Ivbat_POR	Current consumption at Vbat during POR (note 1b)			700	µA
Ivbat_Wu	Current consumption at Vbat in normal mode (note 2)			1	mA
Ivcc_Sle	Current consumption at Vcc in Sleep mode (note 1a)			50	µA
Ivcc_POR	Current consumption at Vcc during POR (note 1b)			200	µA
Ivcc_rec	Current consumption at Vcc in normal mode DE = 1 (note 2a)			20	mA
Ivcc_dom	Current consumption at Vcc in normal mode DE = 0 (note 2b)			35	mA

Note 1a:
The current consumption in sleep mode will be measured under the following conditions:
- Vbat = 16V
- Vcc = 5.25V and Vcc = 0V
- pin SleepB is left open
- DE = '1' (i.e. is left open).

Note 1b:
The current consumption during POR will be measured under the following conditions:
- Vbat = 16V
- Vcc = 2.5V after been lower than PORLVCC
- V(SleepB) = 16V
- DE = '1' (i.e. is left open)

Note 2a:
The current consumption in Normal mode will be measured under the following conditions:
- Vbat = 16V
- Vcc = 5.25V
- V(SleepB) = 16V
- DE = '1' (i.e. is left open)

Note 2b:
The current consumption in dominant mode will be measured under the following conditions:
- Vbat = 16V
- Vcc = 5.25V
- V(SleepB) = 16V
- DE = '0' (i.e. is connected to GND) + V(WATCHDOG) = 0V (to disable watchdog function)

Common for Note 1a, 1b, 2a, 2b:
- pin Vpol not loaded resistively
- pin WU is left open
- pin REXT loaded with 10KΩ to GND
- pins Data and DataB not loaded resistively
- pins R0, R1 and R2 not loaded resistively
- pin SELECTB = 0 (i.e. left open)

Downloaded from DatasheetLib.com - datasheet search engine

MTC-30522

Digital Inputs/Outputs

Sym	Description	Min	Max	Unit
VSleepBt	hreshold level for input SleepB	2	3	V
RSleepB	Pull down resistor at input SleepB	10	45	KΩ
VHin	High level for digital inputs DE, SELECTB		0.7	Vcc
VLin	Low level for digital inputs DE, SELECTB	0.3	Vcc	
Vhyst §	Hysteresis for digital inputs DE, SELECTB	0.075		Vcc
IHinDE	Input current for digital input DE during sleep-mode (note 3)		50	µA
IHinSEB	Input current for digital input SELECTB during sleep-mode (note 3)		50 + V(selectb)/ Rinpd	µA
Rinpu	Pull-up resistor at digital input DE	5	20	KΩ
Rinpd	Pull-down resistor at digital input SELECTB	5	20	KΩ
VHout	High level of R0, R1, R2 for Isource = 2mA for Isource = 100µA (Note 2)	 0.8 0.9		 Vcc Vcc
VLout	Low level of R0, R1, R2 for Isink = 2mA for Isink = 100µA (Note 2)		 0.2 0.1	 Vcc Vcc
ILout	Leakage current at outputs R0, R1, R2 when outputs in tristate & outputs = 0V or outputs = Vcc	-50	50	µA
TdLH,TdHL §	rise and fall time at outputs R0, R1, R2 load: R = 1MegΩ, C = 20pF (Note 1)		50	ns
Dtd §	difference between rise and fall time Note 1		25	ns
VSREG	Low level at output SREG for Isink = 1mA with output on for master node VB>10V		0.5	V
ILSreg	Leakage current at output SREG with output off V(SREG) = VBAT = 16V		50	µA

Note 1:
These 2 parameters are design-targets and will as such not be measured during production. Indirectly they are measured when measuring the parameters TprLH, TprHL, and DTpr for the receiver.

Note 2:
Only the most critical current (100uA or 2mA) will be tested during production. The other can be guaranteed when the most critical current reach the spec.

Note 3:
Input current for pins DE, SELECTB at 5V with Vbat = 0V and Vcc not connected.

Downloaded from DatasheetLib.com - datasheet search engine

MTC-30522

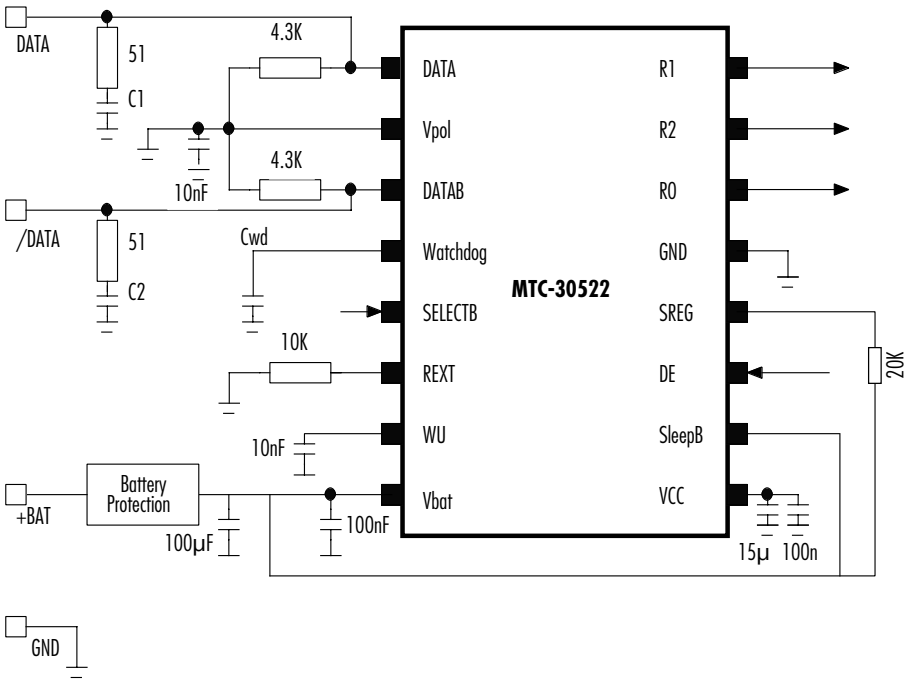

Fig.26: REMX Applications diagram

C1 & C2 = 330pF @ 62,5 kTs/s
150pF @ 125 kTs/s

Cwd = 6,8nF @ 62,5 kTs/s
3,3nF @ 125 kTs/s

Downloaded from DatasheetLib.com - datasheet search engine

MTC-30522

Quality and Reliability

Reliability Performance

- **Quality and Reliability Objectives**

In order to fulfil the automotive applications requirements, Alcatel Microelectronics will commit to quality and reliability goals as described hereunder. Alcatel Microelectronics commits to analyse failing devices and to define and implement corrective actions to prevent future occurrence of these failures. These targets are valid for component operation within the specified operating conditions.

Failures due to external overstresses such as ESD, voltage and current overstresses which are above this current component spec are not included in this figures.

- **External Stress Immunity**

- Electrostatic discharges:
  The device withstands 2000 Volts Standardized Human Body Model ESD pulses when tested according to MIL std 883c method 3015.7 (pin combination 2)
- Latch-up:
  Static latch-up protection level is 100mA at 125°C when tested according to JEDEC nr.17.

- **The Useful Life**

The useful life, when used under moderate conditions, is at least 10 years. The term useful life is specified as the point in the lifetime, where the intrinsic failure rate exceeds the long term failure rate specified under the paragraph: 'The Intrinsic Failure Rate'.

Mechanical and Electrical quality level (up to km 0):

Target in ppm		
98/99	99/00	00/01
50	25	10

Field returns during first year operating:

Target in ppm		
98/99	99/00	00/01
10	10	5

Long-term reliability failure rate:

4 Fits under specified operating conditions.

Downloaded from DatasheetLib.com - datasheet search engine

MTC-30522

Quality

- **Lot-by-lot Acceptance Tests**

Lot conformance to specification of products delivered in volume production (after R1 release), is guaranteed by means of following tests:

Test	Conditions	AQL level	Inspection level
Electrical functional and parametric	To product specification at Tamb = 25°C, low and high Temp	0.065	II
External visual	Physical damage to body or leads. Dimensions affecting PCB manufacturability such as bent leads, coplanarity,...	0.065	II
External visual	Correctness of marking. All other cosmetics defects.	0.065	II

Life Support Applications

These products are not designed for use in life support appliances, devices, or systems where malfunction of these products can reasonably be expected to result in personal injury.
Alcatel Microelectronics customers using or selling these products for use in such applications do so at their own risk and agree to fully indemnify Alcatel Microelectronics for any damages resulting from such improper use or sale.

Downloaded from DatasheetLib.com - datasheet search engine

MTC-30522

Alcatel Microelectronics acknowledges the trademarks of all companies referred to in this document.

This document contains information on a new product. Alcatel Microelectronics reserves the right to make changes in specifications at any time and without notice.

The information furnished by Alcatel Microelectronics in this document is believed to be accurate and reliable. However, no responsibility is assumed by Alcatel Microelectronics for its use, nor for any infringements of patents or other rights of third parties resulting from its use. No licence is granted under any patents or patent rights of Alcatel Microelectronics.

HEADQUARTERS MANUFACTURING & CUSTOMER SERVICE
Westerring 15
9700 Oudenaarde
Belgium
Tel. +32 55 33 24 70
Fax +32 55 33 27 68

MARKETING & DESIGN CENTRE & WESTERN EUROPE (SALES)
Excelsiorlaan 44-46
1930 Zaventem
Belgium
Tel. +32 2 718 18 11
Fax +32 2 725 37 49

SALES OFFICES

Central Europe
Arabellastraße 4
81925 Munich
Germany
Tel. +49 89 920 07 70
Fax +49 89 910 15 59

Stuttgart Office
Schwieberdingertraße 9
70435 Stuttgart
Germany
Tel. +49 711 821 45 304
Fax +49 711 821 44 619

W. Europe/UK
Guildgate House
Shute End
Wokingham RG40 7BH/UK
Tel. +44 118 979 7102
Fax +44 118 979 7103

Northern Europe
Box 4121
SE-17104 Solna
Sweden
Tel. +46 8598 49853
Fax +46 8598 49795

SALES & DESIGN CENTRES

Southern Europe
10, rue Latécoère, B.P.57
78140 Vélizy Cedex
France
Tel. +33 1 46 32 53 86
Fax +33 1 46 32 55 68

Mediterranean Area
Via Trento 30
20059 Vimercate MI
Italy
Tel. +39 039 686 4520
Fax +39 039 686 6899

USA
M/S 412-115
1225 N. Alma Road
Richardson
TX 75081-2206
Tel. +1 972 996 2489
Fax +1 972 996 2503

China
20/F Times Square
500 Zhangyang Road
Shangai 200122
P.R. China
Tel. +86 215 836 8800
Fax +86 215 054 4550

SALES & LOGISTICS OFFICE

Taiwan R.O.C.
Alcatel Microelectronics
Tower A, 17F, N°116, Sect 1
Hsin-Tai 5th Rd, Hsi-Chih,
Taipei County
Taiwan, R.O.C.
Tel. +886 2 2696-2618
Fax +886 2 2696-2562

DESIGN OFFICES

Germany
Königsbrücker Straße 61
D-01099 Dresden
Germany
Tel. +49 351 898 11 11
Fax +49 351 898 11 25

Czech Republic
Videnska 125
61900 Brno
Czech Republic
Tel. +420 5 47 125 400
Fax + 420 5 47 212 751

Turkey
Alcatel Teletas
1 Esensehir Y. Dudullu
81260 Istanbul, Turkey
Tel. +90 216 420 7500
Fax +90 216 420 7584

USA
3101 Industrial Drive
Suite 206, Raleigh
North Carolina 27609,
Tel. +1 919 850 67 31
Fax +1 919 850 66 89

USA
P.O. Box 750699
Petaluma, CA 94975
0699
Tel. +1 707 665 8013
Fax +1 707 792 6310

REPRESENTATIVES / DISTRIBUTION

Europe
Northern Germany, TRIAS, Moerser Landstraße 408, 47802 Krefeld, Germany, Tel. +49 2151 95 30 111, Fax +49 2151 95 30 115
UK, Alpha Micro Comp., Springfield House, Cranes Road, Sherborne St. John, Basingstoke, Hampshire RG24 9LJ, Tel. +44 1256 851770, Fax +44 1256 851771
Spain, Newtek Electronica SA, Centro Empresarial El Plantio, c/Ochandiano 8, 2 Izq., 28023 Madrid, Spain, Tel. +34 91 3076893, Fax +34 91 3729453
Portugal, Comdist, Rua Entreposto Industrial, 3-20 Sala E Edificio Turia, 2720 Alfragide, Portugal, Tel. +35 1 147 251 90, Fax +35 1 147 25 1 99
Israel, Newtek, nr5 Yoni Nethanyahu St., Or-Yehuda 60200, Israel, Tel. +972 3 6344 564, Fax +972 3 6344 568

Asia
China, Shangai Belling Corp., 810 YiShan Rd., Shangai, China, Tel. +86 21 64850700, Fax +86 21 64854424
Hong Kong, Pr. Microelectr. Sales, Room 2101/2, 21/F, Westlands Centre, 20 Westlands Rd, Quarry Bay, Tel. +852 29604611, Fax +852 29600185
Taiwan, Pr. Microelectr. Sales, 3F, No.68, Chou-Tze St., Nei Hu Dist., Taipei 114, Taiwan, R.O.C., Tel. +886 2 8797 6826, Fax +886 2 8797 6827

USA (Premier Technical Sales)
East Canada, 43 Pretty Street, Stittsville, Ontario, K2S1N5 Canada, Tel. +1 613 836 1779, Fax +1 613 836 4459
N. California, 3235 Kiffer Road, Suite 110, Santa Clara, CA 95051, Tel. +1 408 736 2260 (105), Fax +1 408 736 2826
Arizona, 84 West Cypress St, Phoenix, AZ 85003, Tel. +1 602 254 8952, Fax +1 602 229 1100
Boston, 33 Boston Post West, Suite 270, Marlboro, MA 01752, Tel. +1 508 460 1730, Fax +1 508 460 1731
Chicago, 7628 W. Fullerton Avenue, Elorwood Park, IL 60707, Tel. +1 708 583 2372, Fax +1 708 583 2364
Oregan, 5319 S.W. Westgate Dr. Suite 136, Portland, OR 97221, Tel. +1 503 297 3956, Fax +1 503 297 4956
Texas, 800 East Campbell Road, Suite 199, Richardson, TX 75081, Tel. +1 972 680 5233, Fax +1 972 680 5234
Colorado, 1010 Broadview Place, Colorado Springs, CO 80904, Tel. +1 719 632 8340, Fax +1 719 632 1951
Georgia, 11140 Quailbrook Chase, Duluth, GA 30097, Tel. +1 770 476 1235, Fax +1 770 476 3989
New Jersey, 1015 Horseshoe Trail, Volley Forge, PA 194820342, Tel. +1 610 783 1919, Fax +1 610 783 6492

Alcatel Microelectronics
info@mie.alcatel.be
http://www.alcatel.com/telecom/micro

05/00-DS0283a

ALCATEL

Downloaded from DatasheetLib.com - datasheet search engine